PROPRIETARY AND CONFIDENTIAL

THE INFORMATION CONTAINED IN THIS DRAWING IS THE SOLE PROPERTY OF DYTRAN INSTRUMENTS INC. ANY REPRODUCTION IN PART OR AS A WHOLE WITHOUT THE WRITTEN PERMISSION OF DYTRAN INSTRUMENTS INC. IS PROHIBITED

REVISIONS

REV.	ECN	DESCRIPTION	BY/DATE	CHK	APPR
A	17249	INITIAL RELEASE, SAME AS REV X1	JB 01/02/24	DM	DV

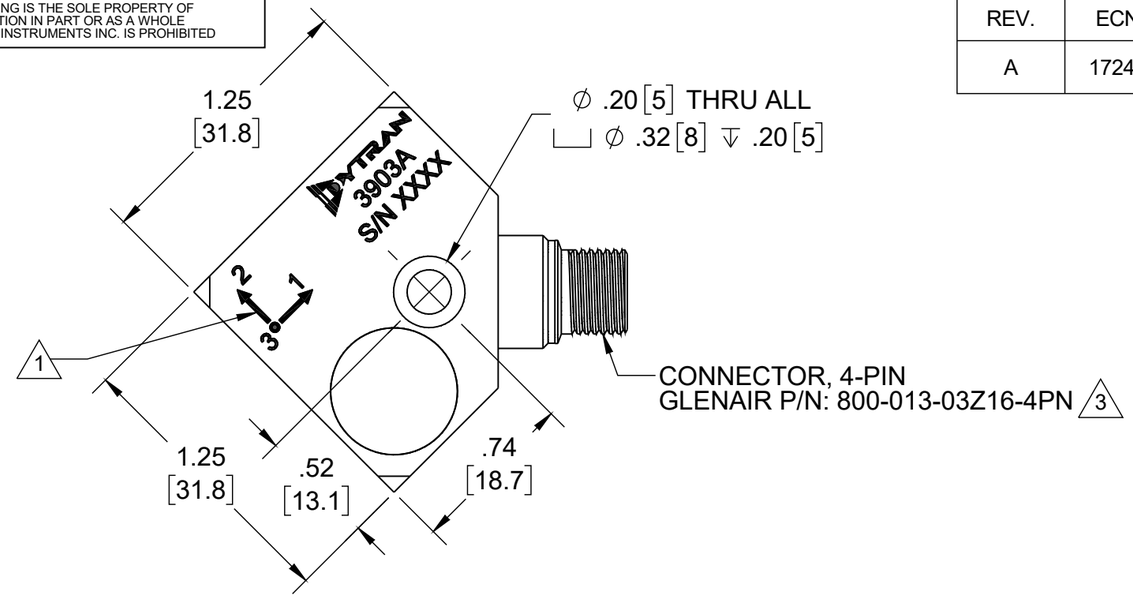

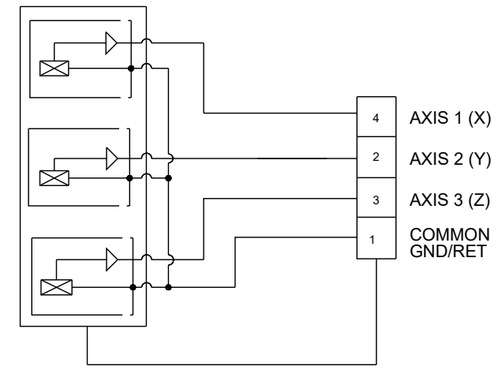

SCHEMATIC DIAGRAM

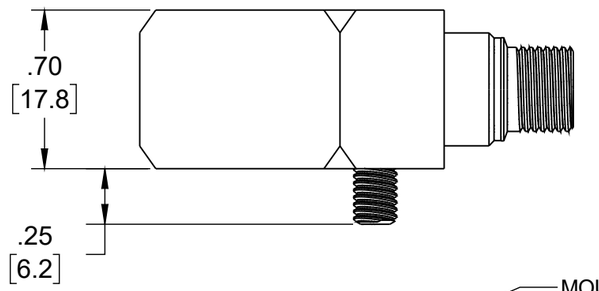

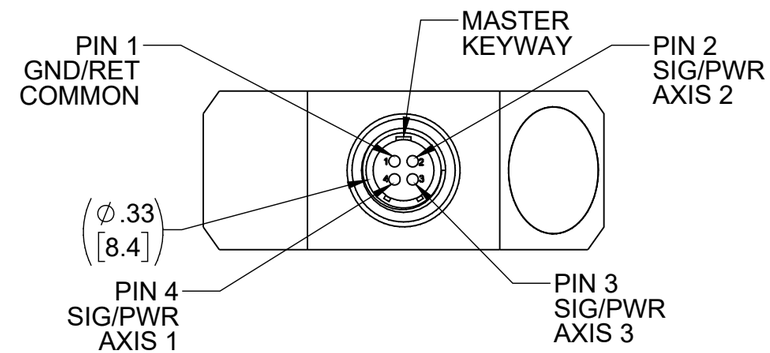

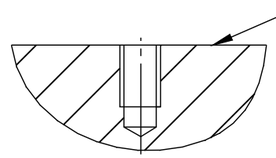

MOUNTING RECOMMENDATIONS:
PREPARE MOUNTING SURFACE FLAT TO .001 TIR.
TAP 10-32 UNF-2B ↧ .40 [10] MIN.
RECOMMENDED MOUNTING TORQUE 10 -12 LB-IN.
FOR BEST FREQUENCY RESPONSE, MOUNTING SURFACE MUST CONTACT THE ENTIRE ACCELEROMETER MOUNTING SURFACE.

6. MINOR VOIDS, SCARS, SCRATCHES, AND MOUNTING BLEMISH/WITNESS MARKS ON EXTERNAL SURFACES ARE ALLOWED DUE TO RESTRAINING AND HANDLING DURING TESTING, TRANSPORT, OR PROCESSING. THESE APPEAR AS INDICATORS THAT DO NOT AFFECT FORM, FIT, OR FUNCTION AS INTENDED BY DEISGN OR APPLICATION.

5 MOUNTING SCREW, 10-32 UNF-2B X .75, MODEL 6543, SUPPLIED.

4. HOUSING AND CONNECTOR MATERIAL: 300 SERIES STAINLESS STEEL.

3 MATING CABLES: 6380AXX, 6381AXX, OR 60042AXX.

2. WEIGHT: 95 GRAMS, MAX.

1 ARROWS INDICATE DIRECTION OF ACCELERATION FOR POSITIVE OUTPUT.

NOTES: UNLESS OTHERWISE SPECIFIED

UNLESS OTHERWISE SPECIFIED:
INTERPRET DIM & TOL PER ASME Y14.5M - 1994.
REMOVE BURRS.
COUNTERSINK INTERNAL THDS 90° TO MAJOR DIA.
CHAM EXT THDS 45° TO MINOR DIA.
THD LENGTHS AND DEPTHS ARE FOR MIN FULL THDS.
DIMENSIONS APPLY AFTER FINISHING.

ALL MACHINED SURFACES. 63
TOTAL RUNOUT WITHIN .005.
BREAK SHARP EDGES .005 TO .010.
MACHINED FILLET RADII .005 TO .015.
WELDING SYMBOLS PER AWS A2.4.
ABBREVIATIONS PER MIL-STD-12.

UNLESS OTHERWISE SPECIFIED:
DIMENSIONS ARE IN INCHES.
DIMENSIONS IN BRACKETS [ ] ARE IN MILLIMETERS TOLERANCES ARE:

DECIMALS	METRIC	ANGLES
.XX ±.03	.X ± 0.8	±1°
.XXX ±.010	.XX ±0.25	

APPROVALS		DATE
ORIG	JB	06/06/23
CHK	AS	06/09/23
APP	DV	02/27/24

DO NOT SCALE DRAWING

THIRD ANGLE PROJECTION USA

DYTRAN INSTRUMENTS, INC. Chatsworth, CA

TITLE: OUTLINE/INSTALLATION DRAWING, MECHANICALLY FILTERED, TRIAXIAL, MODEL 3903A

SIZE	CAGE CODE	DWG NO	REV
B	2W033	127-3903A	A

SCALE: 3:2 SHEET 1 OF 1

172-0186 REV A

Model Number 3903A	PERFORMANCE SPECIFICATIONS	DOC NO PS3903A
	IEPE TRIAXIAL ACCELEROMETER	REV A, ECN 17249, 01/03/24

- **MECHANICALLY AND ELECTRICALLY FILTERED**
- **HERMETICALLY SEALED**
- **CASE GROUND ISOLATED**

		ENGLISH		SI	
PHYSICAL					
Weight, Max		3.3	oz	95	grams
Connector [1]	Type	4 - Pin		4 - Pin	
Mounting Provision	Thru Hole	10-32 Mounting Screw		10-32 Mounting Screw	
Material, Housing/Connector		300 Series S.S.		300 Series S.S.	
Sensing Element		Quartz		Quartz	
Element Style		Planar Shear		Planar Shear	
PERFORMANCE					
Sensitivity, ±5%		10.0	mV/g	1.0	$mV/m/s^2$
Range for ± 5 Volts Output		±500	g pk	±49050	m/s^2 pk
Frequency Response, ±3dB		0.5 to 10000	Hz	0.5 to 10000	Hz
Resonant Frequency		> 25	kHz	> 25	kHz
Broadband Resolution		0.007	g RMS	0.069	m/s^2 RMS
Linearity [3]		± 1	% F.S.	± 1	% F.S.
Maximum Transverse Sensitivity		6	%	6	%
Strain Sensitivity @ 250με		0.012	g/με	0.12	$m/s^2/\mu\varepsilon$
ENVIRONMENTAL					
Maximum Shock		7000	g pk	68670	m/s^2 pk
Operating Temperature Range		-60 to 250	°F	-51 to 121	°C
Seal		Hermetic		Hermetic	
ELECTRICAL					
Supply Current Range [4]		2 to 20	mA	2 to 20	mA
Compliance Voltage Range		+18 to +30	Volts	+18 to +30	Volts
Output Impedance,Typ		100	Ω	100	Ω
Bias Voltage		+7.0 to +11.5	VDC	+7.0 to +11.5	VDC
Discharge Time Constant		0.5 to 2.0	Sec	0.5 to 2.0	Sec
Electrical Isolation		10	GΩ,min	10	GΩ,min

This family also includes:

Model	Sensitivity (mV/g)	Frequency Response (Hz)	Time Constant (Sec)	Operating Temp (°F)

Refer to the performance specifications of the products in this family for detailed description

Supplied Accessories:

1) Accredited calibration certificate (ISO 17025)
2) Mounting screw 6543, 10-32 x .75, QTY 1

Notes:

[1] Glenair P/N: 800-013-03-Z16-4PN. Mates with Dytran cables: 6380AXX and 60042AXX.
[2] All specifications are at room temperature unless otherwise specified.
[3] Measured using zero-based straight line method, % of F.S. or any lesser range.
[4] Do not apply power to this system without current limiting, 20 mA MAX. To do so will destroy the amplifier.
[5] In the interest of constant product improvement, we reserve the right to change specifications without notice.
It is the customer's responsibility to validate that a particular product with the properties described in the product specification is suitable for use in a particular application. Parameters provided in datasheets and / or specifications may vary in different applications and performance may vary overtime. All operating parameters, including typical parameters, must be validated for each customer application by the customer's technical experts.

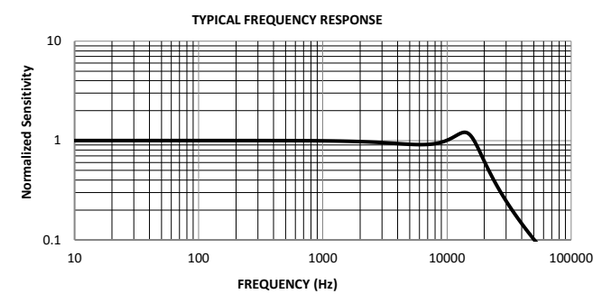

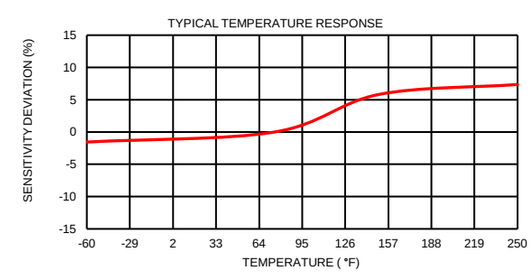

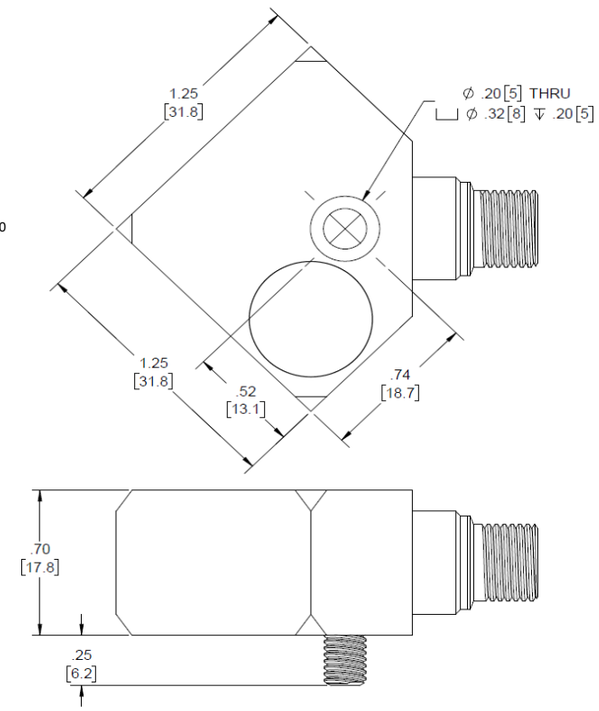

Units on the line drawing are in inches, units in brackets are in millimeters. Refer to 127-3903A for more information.

DYTRAN INSTRUMENTS, INC.
21592 Marilla Street, Chatsworth, California 91311 Phone: 818.700.7818 Fax:818.698.0362 www.dytran.com

For permission to reprint this content, please contact info@dytran.com