DWG NO 127-3056D9T SH 1 REV A

THE INFORMATION CONTAINED IN THIS DRAWING IS THE SOLE PROPERTY OF DYTRAN INSTRUMENTS INC. ANY REPRODUCTION IN PART OR AS A WHOLE WITHOUT THE WRITTEN PERMISSION OF DYTRAN INSTRUMENTS INC. IS PROHIBITED

MODEL	SENSITIVITY
3056D9T	10 mV/g
3056D10T	20 mV/g
3056D11T	50 mV/g
3056D12T	100 mV/g
3056D13T	200 mV/g
3056D14T	500 mV/g

REVISIONS

REV.	ECN	DESCRIPTION	BY/DATE	CHK	APPR
A	14614	INITIAL RELEASE	KG 12/08/20	RA	DV

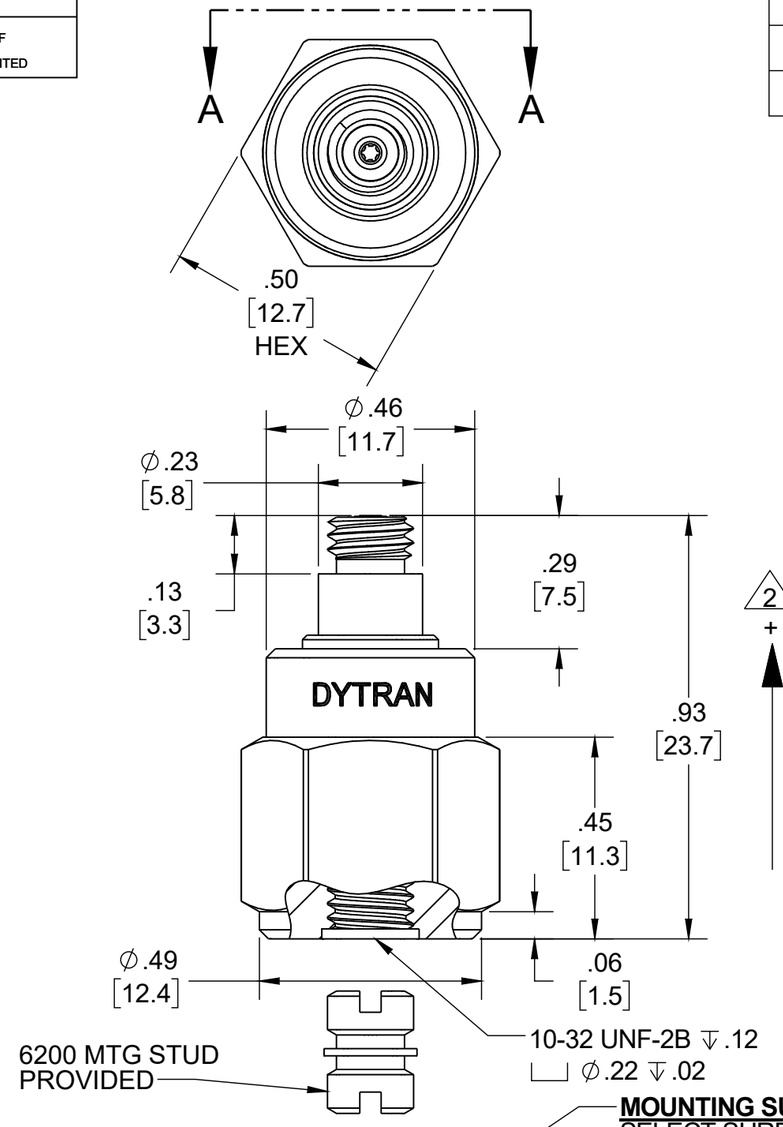

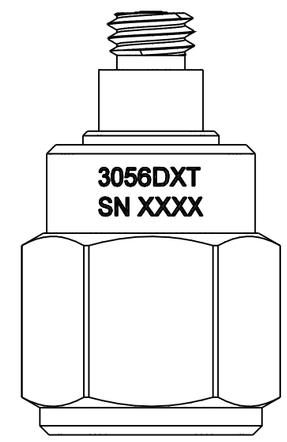

SECTION A-A
180.00°

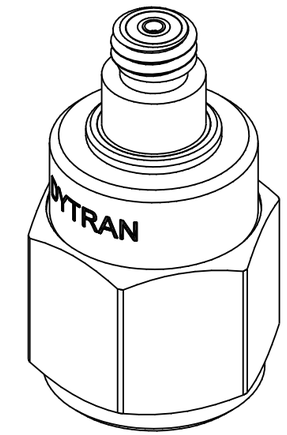

MOUNTING SURFACE HOLE PREPARATION:
SELECT SURFACE FLAT TO .001 TIR
TAP 10-32 UNF-2B X .200 MIN THD DEPTH

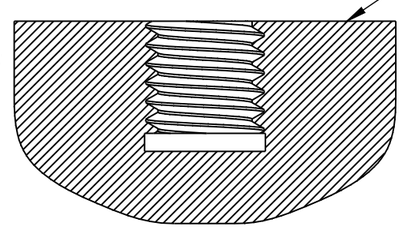

5. OPERATING TEMPERATURE: -67°F TO +320°F [-55°C TO +160°C]
   TEDS OPERATING TEMPERATURE: -40°F TO +185°F [-40°C TO +85°C]

4. MATES WITH DYTRAN 6010AXX OR 6011AXX CABLE (XX=LENGTH IS FEET)

3. WEIGHT: 10 GRAMS (APPROX)

2. ARROW INDICATES ACCELERATION DIRECTION FOR POSITIVE OUTPUT.

1. MATERIAL: TITANIUM ALLOY

NOTES: UNLESS OTHERWISE SPECIFIED

UNLESS OTHERWISE SPECIFIED:
INTERPRET DIM & TOL PER ASME Y14.5M - 1994.
REMOVE BURRS.
COUNTERSINK INTERNAL THDS 90° TO MAJOR DIA.
CHAM EXT THDS 45° TO MINOR DIA.
THD LENGTHS AND DEPTHS ARE FOR MIN FULL THDS.
DIMENSIONS APPLY AFTER FINISHING.

ALL MACHINED SURFACES. 63
TOTAL RUNOUT WITHIN .005.
BREAK SHARP EDGES .005 TO .010.
MACHINED FILLET RADII .005 TO .015.
WELDING SYMBOLS PER AWS A2.4.
ABBREVIATIONS PER MIL-STD-12.

UNLESS OTHERWISE SPECIFIED:
DIMENSIONS ARE IN INCHES.
TOLERANCES ARE:

DECIMALS	METRIC	ANGLES
.XX ±.03	.X ± 0.8	±1°
.XXX ±.010	.XX ±0.25	

APPROVALS		DATE
ORIG	KG	12/08/20
CHK	RA	01/25/21
APP	DV	01/29/21

DO NOT SCALE DRAWING

THIRD ANGLE PROJECTION USA

DYTRAN INSTRUMENTS, INC. Chatsworth, CA

TITLE: OUTLINE/INSTALLATION DWG, SINGLE AXIS ACCEL, 320F, ISOLATED, TEDS, 3056D9T SERIES

SIZE	CAGE CODE	DWG NO	REV
B	2W033	127-3056D9T	A

SCALE: 3:1 SHEET 1 OF 1

172-0186 REV B

Model Number	PERFORMANCE SPECIFICATIONS	DOC NO
3056D14T		PS3056D14T
	IEPE ACCELEROMETER	REV B, ECN 16090, 03/02/21

- **-67 °F TO +325°F OPERATION**
- **BASE ISOLATED**
- **IDEAL LOW FREQUENCY RESPONSE**
- **HERMETICALLY SEALED**

		ENGLISH		SI	
PHYSICAL					
Weight		0.35	oz	10	grams
Connector	Type	10-32		10-32	
Mounting Provision	Tapped Hole	10-32 Tapped hole		10-32 Tapped hole	
Material, Housing/Connector		Titanium		Titanium	
Sensing Element		Ceramic		Ceramic	
Element Style		Planar Shear		Planar Shear	
PERFORMANCE					
Sensitivity, ± 5% [2]		500	mV/g	51.0	mV/m/s^2
Range for ± 5 Volts Output		±10	g pk	±98	m/s^2 pk
Frequency Response, ± 5%		1 to 5000	Hz	1 to 5000	Hz
Frequency Response, ± 10%		1 to 10000	Hz	1 to 10000	Hz
Resonant Frequency		> 36	kHz	> 36	kHz
Broad Band Resolution		0.0003	g RMS	0.003	m/s^2 RMS
Linearity [3]		±1	% F.S.	±1	% F.S.
Maximum Transverse sensitivity		5	%	5	%
Strain Sensitivity @ 250με		0.001	g/με	0.01	m/s^2/με
ENVIRONMENTAL					
Maximum Shock		±2,000	g pk	19620	m/s^2 pk
Temperature Range		-67 to +325	°F	-55 to +163	°C
TEDS Operating Temperature Range		-40 to +185	°F	-40 to +85	°C
Seal		Hermetic		Hermetic	
ELECTRICAL					
Supply Current Range [4]		2 to 20	mA	2 to 20	mA
Compliance Voltage Range		+18 to +30	Volts	+18 to +30	Volts
Output Impedance,Typ		100	Ω	100	Ω
Bias Voltage		+10 to +13	VDC	+10 to +13	VDC
Discharge Time Constant		0.5 to 1.5	Sec	0.5 to 1.5	Sec
Electrical Isolation		10	GΩ, min	10	GΩ, min
TEDS Feature		IEEE 1451.4		IEEE 1451.4	

This family also includes:

Model	Sensitivity (mV/g)	Frequency Response, ±10% (Hz)	Time Constant (Sec)	Operating Temp (°F)
3056D9T	10	1 to 10000	0.5 to 1.5	-67 to +325
3056D10T	20	1 to 10000	0.5 to 1.5	-67 to +325
3056D11T	50	1 to 10000	0.5 to 1.5	-67 to +325
3056D12T	100	1 to 10000	0.5 to 1.5	-67 to +325
3056D13T	200	1 to 10000	0.5 to 1.5	-67 to +325

Refer to the performance specifications of the products in this family for detailed description

Supplied Accessories:

1) Accredited calibration certificate (ISO 17025)
2) Model 6200 mounting stud, Qty. 1

Notes:

[1] All specifications are at room temperature unless otherwise specified.
[2] Measured at 100Hz, 1 g RMS per ISA RP 37.2.
[3] Measure using zero-based straight line method, % of F.S. or any lesser range.
[4] Do not apply power to this system without current limiting, 20 mA MAX. To do so will destroy the IC charge amplifier.
[5] In the interest of constant product improvement, we reserve the right to change specifications without notice.
It is the customer's responsibility to validate that a particular product with the properties described in the product specification is suitable for use in a particular application. Parameters provided in datasheets and / or specifications may vary in different applications and performance may vary over time. All operating parameters, including typical parameters, must be validated for each customer application by the customer's technical experts.

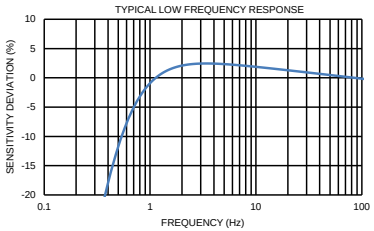

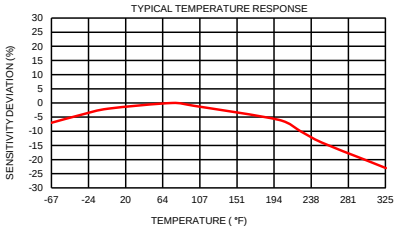

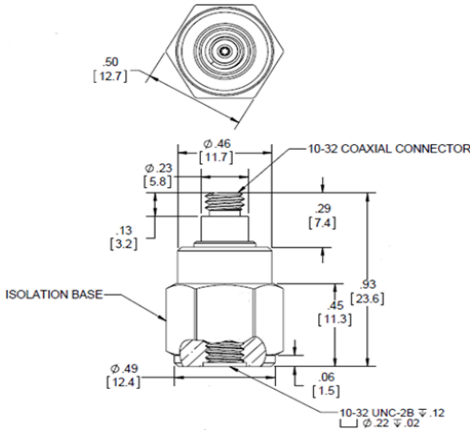

Units on the line drawing are in inches, units in brackets are in millimeters. Refer to 127-3056D9T for more information.

DYTRAN INSTRUMENTS, INC.
21592 Marilla Street, Chatsworth, California 91311 Phone: 818.700.7818 Fax:818.698.0362 www.dytran.com

For permission to reprint this content, please contact info@dytran.com