MODEL LCF551

# Pancake Load Cell – High Capacity Fatigue Rated

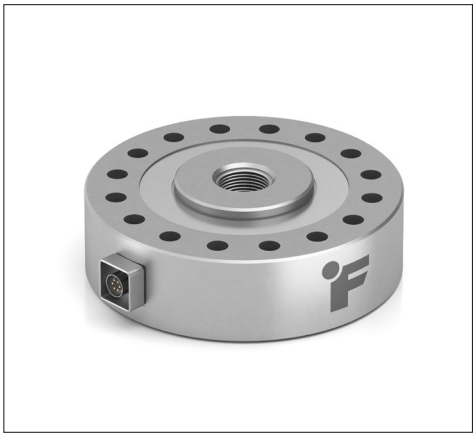

## FEATURES

- Robust Performance in Challenging Environments
- Stable in Extreme Temperatures
- Minimal Deflection
- Low Creep
- Robust Durability

**Active end**

**+ Output (tension)**
**– Output (compression)**

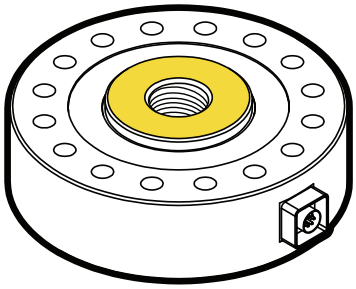

**Fixed end**

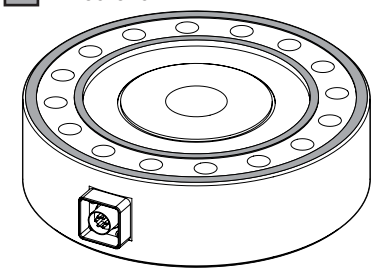

| SPECIFICATIONS | |
|---|---|
| **PERFORMANCE** | |
| Nonlinearity | ±0.2% of RO |
| Hysteresis | ±0.2% of RO |
| Nonrepeatability | ±0.02% of RO |
| **ELECTRICAL** | |
| Rated Output (RO) | 2 mV/V nom |
| Excitation (VDC or VAC) | 20 max |
| Bridge Resistance | 350 Ohm nom |
| Insulation Resistance | ≥500 MOhm @ 50 VDC |
| Connection | 6 Pin BENDIX Receptacle (PT02A-10-6P) |
| Connector Code | CC1 |
| **MECHANICAL** | |
| Weight (approximate) | 25 lb [11.3 kg] |
| Safe Overload | 150% of RO |
| Deflection | 0.001 in [0.025 mm] nom |
| Material | 17-4 PH stainless-steel |
| IP Rating | IP64 |
| **TEMPERATURE** | |
| Operating Temperature | -60 to 200°F [-50 to 93°C] |
| Compensated Temperature | 60 to 160°F [15 to 72°C] |
| Temperature Shift Zero | ±0.001% of RO/°F [0.0018% of RO/°C] |
| Temperature Shift Span | ±0.002% of Load/°F [0.0036% of Load/°C] |
| **CALIBRATION** | |
| Calibration Test Excitation | 10 VDC |
| Calibration (standard) | 5-pt compression |
| Calibration (available) | 5-pt tension and compression |
| Shunt Calibration Value | 60.4 kOhm |
| **CONFORMITY** | |
| RoHS | 2011/65/EU with 2015/863 |
| CE | EN55011; EN61326-1 |

## DIMENSIONS inches [mm]

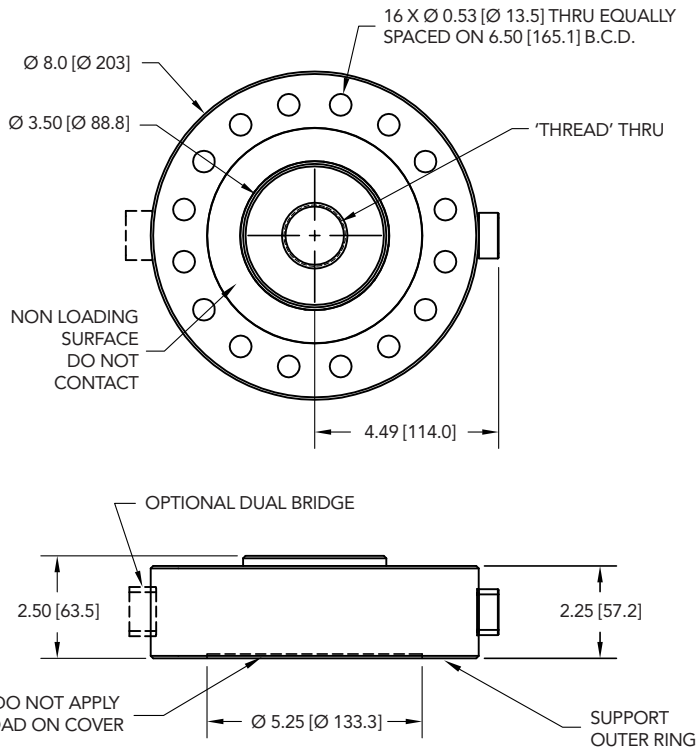


## CAPACITIES

| ITEM # | lb | N | Natural Frequency (Hz) | Thread | Dual Bridge |
|---|---|---|---|---|---|
| **FSH04610** | 50000 | 222411 | 8300 | 1 3/4-12-2B | |
| **FSH04609** | 50000 | 222411 | 8300 | 1 3/4-12-2B | X |

## BENDIX 6-PIN (CC1)

| PIN | COLOR | DESCRIPTION |
|---|---|---|
| **A** | Red | + Excitation |
| **B** | Black | – Excitation |
| **C** | Green | + Signal |
| **D** | White | – Signal |
| **E** | Orange | + Sense |
| **F** | Blue | – Sense |

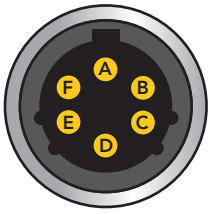


Sensor Receptacle View

**Drawing Number: FI1576**

FUTEK reserves the right to modify its design and specifications without notice.
Please visit www.futek.com/salesterms for complete terms and conditions.

**10 Thomas, Irvine, CA 92618 USA**

**www.futek.com**

ANSI Z540-1 · ISO 17025 · ISO 9001 · ISO 13485 · U.S. Manufacturer