MODEL LCF555

Pancake Load Cell with Tension Base – High Capacity

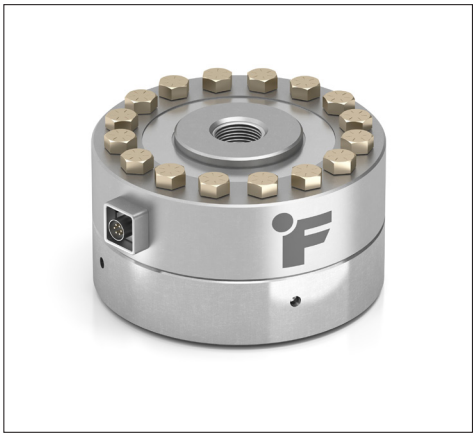

FEATURES

- Robust Performance in Challenging Environments
- Stable in Extreme Temperatures
- Minimal Deflection
- Low Creep
- Robust Durability
- High Responsiveness (4 mV/V)

Active end

+ Output (tension)
– Output (compression)

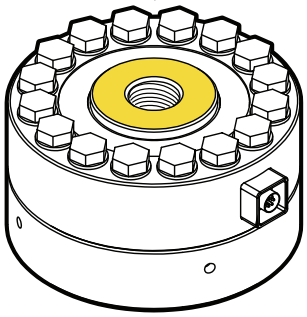

Fixed end

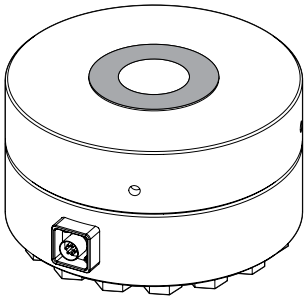

SPECIFICATIONS	
PERFORMANCE	
Nonlinearity	±0.2% of RO
Hysteresis	±0.2% of RO
Nonrepeatability	±0.02% of RO
ELECTRICAL	
Rated Output (RO)	4 mV/V nom
Excitation (VDC or VAC)	20 max
Bridge Resistance	350 Ohm nom
Insulation Resistance	≥500 MOhm @ 50 VDC
Connection	6 Pin BENDIX Receptacle (PT02A-10-6P)
Connector Code	CC1
MECHANICAL	
Weight (approximate)	50 lb [22.7 kg]
Safe Overload	150% of RO
Deflection	0.002 in [0.05 mm] nom
Material	17-4 PH stainless-steel
IP Rating	IP64
TEMPERATURE	
Operating Temperature	-60 to 200°F [-50 to 93°C]
Compensated Temperature	60 to 160°F [15 to 72°C]
Temperature Shift Zero	±0.001% of RO/°F [0.0018% of RO/°C]
Temperature Shift Span	±0.002% of Load/°F [0.0036% of Load/°C]
CALIBRATION	
Calibration Test Excitation	10 VDC
Calibration (standard)	5-pt compression
Calibration (available)	5-pt tension and compression
Shunt Calibration Value	30 kOhm
CONFORMITY	
RoHS	2011/65/EU with 2015/863
CE	EN55011; EN61326-1

DIMENSIONS inches [mm]

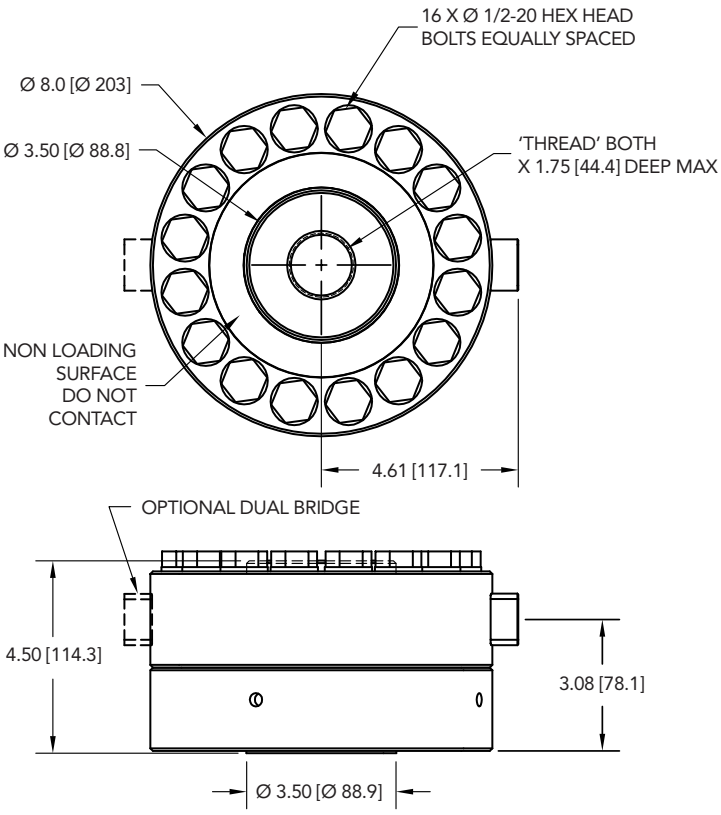

CAPACITIES

ITEM #	lb	N	Natural Frequency (Hz)	Thread	Dual Bridge
FSH04417	100000	444800	8300	1 3/4-12-2B	
FSH04427	100000	444800	8300	1 3/4-12-2B	X

BENDIX 6-PIN (CC1)

PIN	COLOR	DESCRIPTION
A	Red	+ Excitation
B	Black	– Excitation
C	Green	+ Signal
D	White	– Signal
E	Orange	+ Sense
F	Blue	– Sense

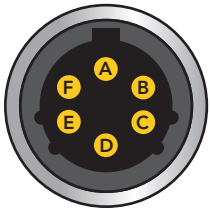

Sensor Receptacle View

Drawing Number: FI1577

FUTEK reserves the right to modify its design and specifications without notice.
Please visit www.futek.com/salesterms for complete terms and conditions.

10 Thomas, Irvine, CA 92618 USA

www.futek.com

ANSI Z540-1 · ISO 17025 · ISO 9001 · ISO 13485 · U.S. Manufacturer