10 Thomas, Irvine, CA 92618 USA
Email: futek@futek.com

Terms and Conditions of Use

This drawing, including all information depicted herein (collectively, "Drawing"), is FUTEK's property and protected under applicable law, including copyright. FUTEK reserves all rights. The Drawing is provided solely for your information and exclusive use. **Except as expressly approved by FUTEK in writing, you may not reproduce or share this Drawing,** in whole or part, with any other firm or individual, or attempt to reverse engineer the Drawing or data contained therein. Any reproduction of this Drawing in whole or part must include this legend.

By accessing the Drawing, you agree that you have read, understand, and agree to abide by the stated Terms and Conditions of Use.

© 2023 FUTEK Advanced Sensor Technology, Inc.

FUTEK
ADVANCED SENSOR TECHNOLOGY, INC.

MODEL LLB215

Miniature Threaded Load Button

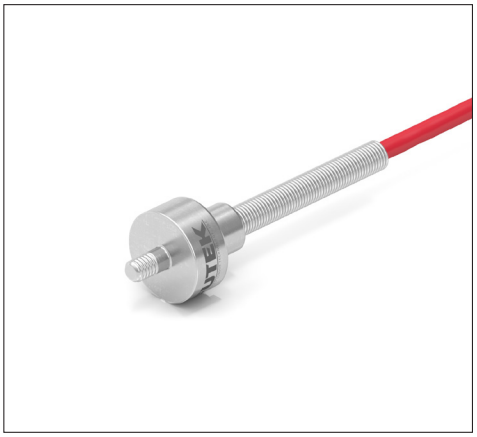

FEATURES

- Mechanical strain relief
- Subminiature / light weight
- Low deflection / fast response
- Fully internally temperature compensated
- Threaded Load Button
- Axial cable exit

Non-loading surface, do not contact

Active End

Fixed End

Top view

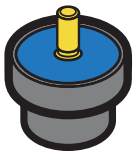

Bottom view

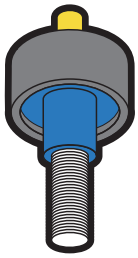

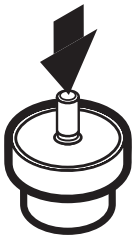

+ Output (compression)

SPECIFICATIONS	
PERFORMANCE	
Nonlinearity	±0.5% of RO
Hysteresis	±0.5% of RO
Nonrepeatability	±0.1% of RO
ELECTRICAL	
Rated Output (RO)	1 mV/V (25 lb) 2 mV/V (50 lb)
Excitation (VDC or VAC)	7 max
Bridge Resistance	350 Ohm nom
Insulation Resistance	≥500 MOhm @ 50 VDC
Connection	#29 AWG, 4 conductor, spiral shielded silicone cable 10-ft [3 m] long
Wiring/Connector Code	WC1
MECHANICAL	
Weight (approximate)	1 oz [28 g]
Safe Overload	150% of RO
Deflection	0.0007 in
Material	17-4 PH stainless-steel
IP Rating	IP64
TEMPERATURE	
Operating Temperature	–60 to 200°F (–50 to 93°C)
Compensated Temperature	60 to 160°F (15 to 72°C)
Temperature Shift Zero	±0.01% of RO/°F (±0.018% of RO/°C)
Temperature Shift Span	±0.02% of Load/°F (±0.036% of Load/°C)
CALIBRATION	
Calibration Test Excitation	5 VDC
Calibration (standard)	5-pt Compression
Shunt Calibration Value	60.4 kOhm
CONFORMITY	
RoHS	EU 2015/863
CE	EN55011; EN61326-1

DIMENSIONS inches [mm]

TOLERANCE:
.X ± 0.1" [2.5]
.XX ± 0.01" [0.25]
.XXX ± 0.005" [0.127]

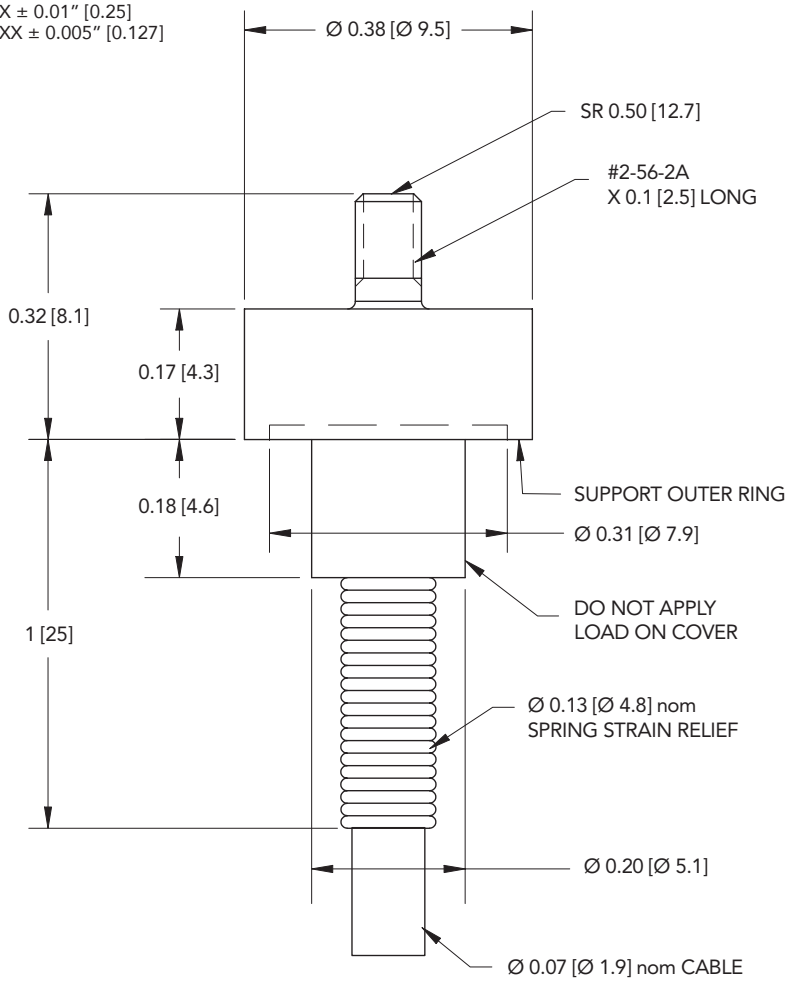

WIRING CODE (WC1 WITH SHIELD)

RED	+ EXCITATION
BLACK	– EXCITATION
GREEN	+ SIGNAL
WHITE	– SIGNAL
SHIELD	FLOATING

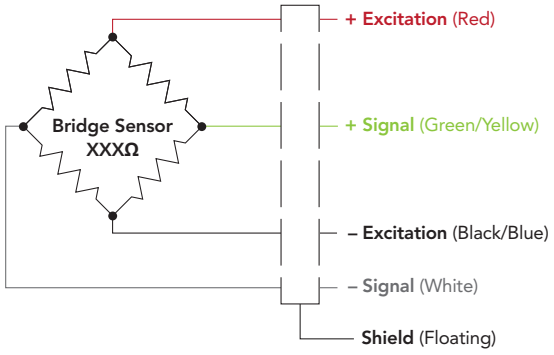

CAPACITIES

ITEM #	lb	N	Natural Frequency (kHz)
FSH04426	25	111	22
FSH04771	50	222	31

Drawing Number: FI1258-E

FUTEK reserves the right to modify its design and specifications without notice.
Please visit http://www.futek.com/salesterms for complete terms and conditions.

10 Thomas, Irvine, CA 92618 USA
futek@futek.com

www.futek.com

CE RoHS ANSI Z540-1 ISO 17025 ISO 9001 ISO 13485 U.S. Manufacturer