MODEL LAU220

Pedal Force Sensor



FEATURES

- Ideal for Automotive Applications involving brake testing
- Ideal for Aerospace Applications involving pedal force testing
- Spike resistant and highly resistant to off-axis loading
- Low Profile Height
- Removable Mounting Plate
- Light weight

Active end

+ Output (compression)

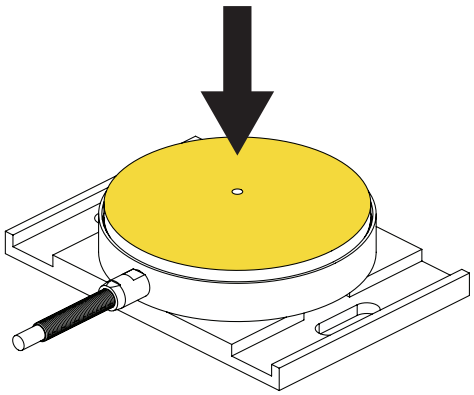

SPECIFICATIONS	
PERFORMANCE	
Nonlinearity	±0.25% of RO
Hysteresis	±0.25% of RO
Nonrepeatability	±0.1% of RO
Off Center Loading	±1% or better @ 0.625 in [15.9 mm] from center
ELECTRICAL	
Rated Output (RO)	1.2 mV/V nom (300 lb) 2 mV/V nom (500 lb)
Excitation (VDC or VAC)	20 max
Bridge Resistance	700 Ohm nom
Insulation Resistance	≥500 MOhm @ 50 VDC
Connection	#24 AWG, 4 conductor, braided shielded PVC cable 15 ft [4.5 m] long
Wiring Code	WC1
MECHANICAL	
Weight	16 oz (454 g)
Safe Overload	150% of RO
Material	17-4 PH stainless-steel
IP Rating	IP64
TEMPERATURE	
Operating Temperature	-60 to 200°F [-50 to 93°C]
Compensated Temperature	60 to 160°F [15 to 72°C]
Temperature Shift Zero	±0.005% of RO/°F [0.03% of RO/°C]
Temperature Shift Span	±0.01% of Load/°F [0.018% of Load/°C]
CALIBRATION	
Calibration Test Excitation	10 VDC
Calibration (standard)	5-pt compression
Shunt Calibration Value	200 kOhm (300 lb) 100 kOhm (500 lb)
CONFORMITY	
RoHS	EU 2015/863
CE	EN55011; EN61326-1

DIMENSIONS inches [mm]

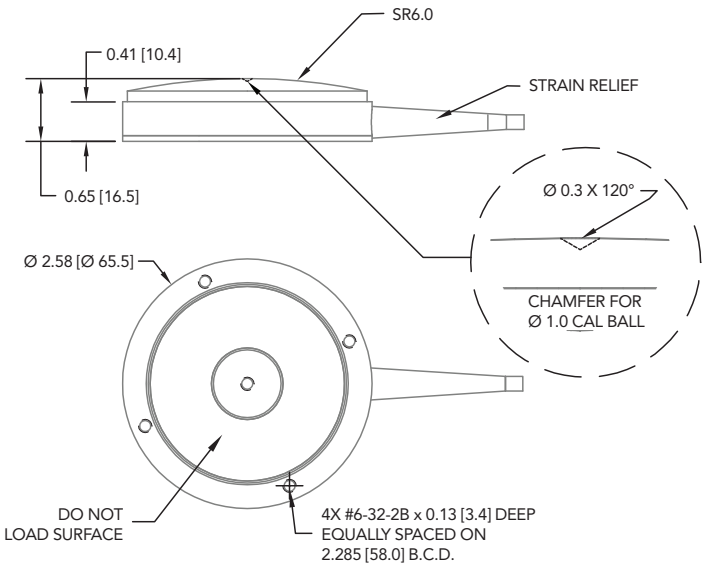

MOUNTING PLATES (ALUMINUM, RED ANODIZED)

ROUND PLATE
ITEM# MCP01098

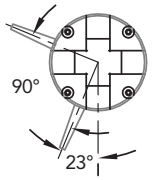

SENSOR CAN BE ROTATED
AT 90° INCREMENTS

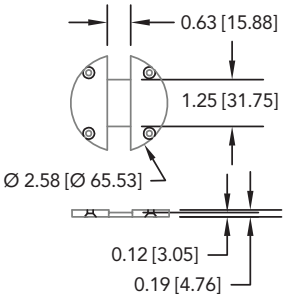

RECTANGULAR PLATE
ITEM# MCP00218

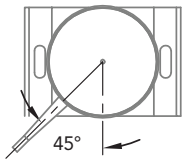

SENSOR CAN BE ROTATED
AT 45° INCREMENTS

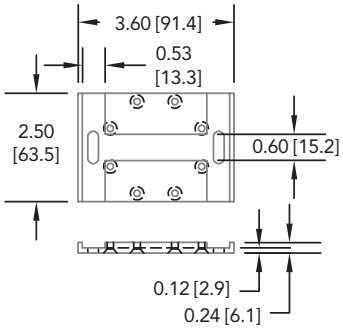

CAPACITIES

ITEM #	lb	N	Deflection (in)	Natural Frequency (Hz)
FSH04395	300	1334	0.002	2000
FSH04396	500	2224	0.003	2000

WIRING CODE (WC1 WITH SHIELD)

RED	+ EXCITATION
BLACK	– EXCITATION
GREEN	+ SIGNAL
WHITE	– SIGNAL
SHIELD	FLOATING

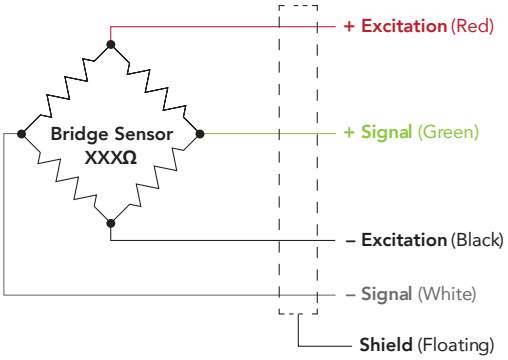

TYPICAL APPLICATION

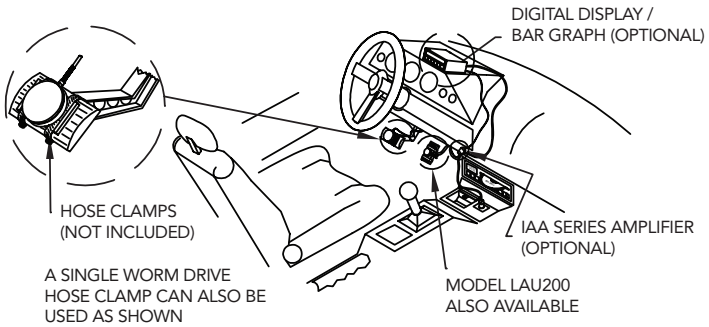

Model LAU220 includes
(one of each)
Total Weight 2 lb [0.9 kg]

- Mounting Plate
- Item# MCP00218
- Item# MCP01098
- 100 kohm shunt cal.
- Carrying case

Drawing Number: FI1483

FUTEK reserves the right to modify its design and specifications without notice.
Please visit www.futek.com/salesterms for complete terms and conditions.

CE RoHS ANSI Z540-1 ISO 17025 ISO 9001 ISO 13485 U.S. Manufacturer