10 Thomas, Irvine, CA 92618 USA
Email: futek@futek.com

Terms and Conditions of Use

This drawing, including all information depicted herein (collectively, "Drawing"), is FUTEK's property and protected under applicable law, including copyright. FUTEK reserves all rights. The Drawing is provided solely for your information and exclusive use. **Except as expressly approved by FUTEK in writing, you may not reproduce or share this Drawing,** in whole or part, with any other firm or individual, or attempt to reverse engineer the Drawing or data contained therein. Any reproduction of this Drawing in whole or part must include this legend.

By accessing the Drawing, you agree that you have read, understand, and agree to abide by the stated Terms and Conditions of Use.

© 2023 FUTEK Advanced Sensor Technology, Inc.

FUTEK MODEL QMA145

ITEM NUMBER: QSH02041

Custom Tri-Axial Bending Beam Load Cell with Triangular Bolt Pattern, RoHS Compliant, SPI Interface

INCH [mm]	R.O.= Rated Output

Digital SPI Output Connector

Pin	Code	Pin	Code
1	VIN	6	MOSI
2	GND	7	SCLK
3	GND	8	CS
4	GND	9	DRDY
5	MISO	10	TRIG

PROGRAMMING CONNECTOR

Pin	Code
1	MCLR
2	3V3
3	GND
4	DAT
5	CLK
6	N/C

RoHS Compliant

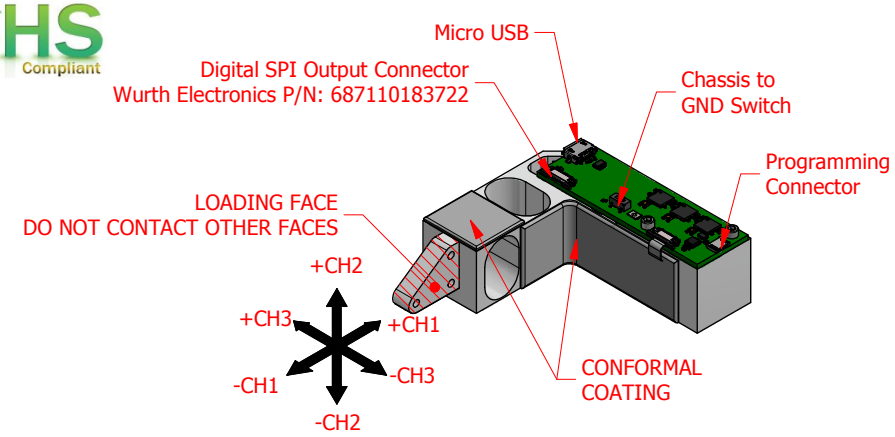

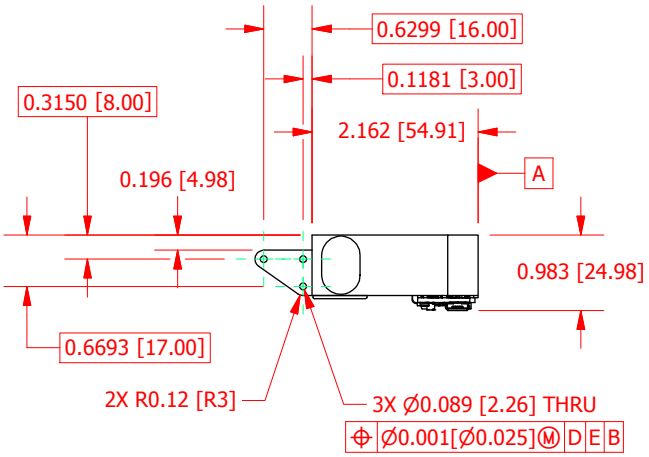

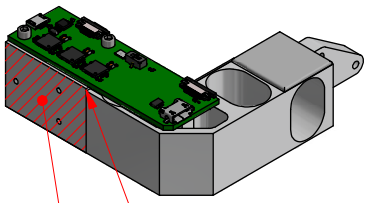

SPECIFICATIONS:

Electronics Specs:
Vin : 5VDC ± 10%
Sampling: 2400 SPS
Resolution: 0.03N @ 2400 SPS (Design Goal)
SPI Output Voltage: 3.3VDC

Sensor Spec:
Capacity: 5 lb [22.2N]
Safe Overload: 500% of R.O.
Nonlinearity: ±0.25% of R.O.
Hysteresis: ±0.25% of R.O.
Nonrepeatability: ±0.1% of R.O.
Temp. Shift Zero: ±0.005% of R.O./°F
[±0.009% of R.O./°C]
Temp. Shift Span: ±0.005% of Load/°F
[±0.009% of Load/°C]
Compensated Temp: 60 to 160°F [16 to 71°C]
Operating Temp: 32 to 160°F [0 to 71°C]
Material: Anodized Aluminum
Approx. Total Weight: 2.0 oz [57 g]
RoHS 2011/65/EU

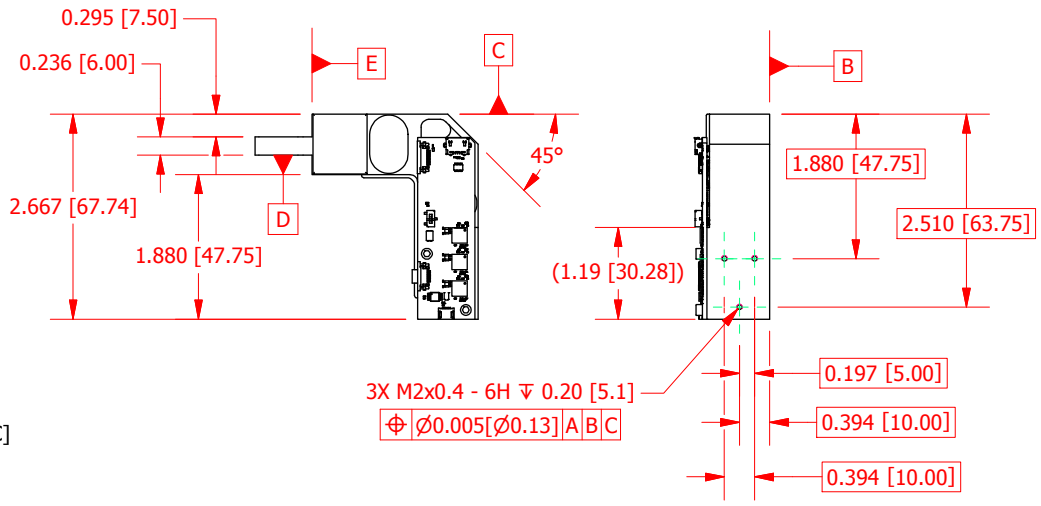

CUSTOMER APPROVAL- COMPANY:

CUSTOMER APPROVAL- NAME / DATE:

REVISIONS: (Refer to dwg # revision sheet)

OUTLINE DRAWING

STANDARD NOTES: (Unless Otherwise Specified)
ALL DIMENSIONS ARE IN INCHES. METRIC FOR REFERENCE ONLY.
DRAWING INTERPRETATION DIMS. PER ASME-Y14.5
REMOVE BURRS AND BREAK SHARP EDGES .005 - .015
THREADS PER HANDBOOK H-28
DIMENSIONS ARE SHOWN AFTER PLATING

3rd ANGLE PROJ.

ANGLE: ± 1/2°
CHAMFER: ± 5°
TOLERANCE: .X ± 0.1" .XX ± 0.01" .XXX ± 0.005"

FUTEK

This drawing, including all information depicted herein (collectively, "Drawing"), is FUTEK's property and protected under applicable law, including copyright. FUTEK reserves all rights. The Drawing is provided solely for your information and exclusive use. **Except as expressly approved by FUTEK in writing, you may not reproduce or share this Drawing**, in whole or part, with any other firm or individual, or attempt to reverse engineer the Drawing or data contained therein. Any reproduction of this Drawing in whole or part must include this legend.

MODEL: QMA145	DWG No.: FO1491
DRAWN BY: S. MICHEL	CREATED DATE: 11/6/2018
APPROVED BY: R. WALKER	APPROVED DATE: 11/13/2018
CHECKED BY: F. ALLAHAKBARI	CAGE: 1X8M6 SHEET: 1 OF 1