10 Thomas, Irvine, CA 92618 USA
Email: futek@futek.com

Terms and Conditions of Use

This drawing, including all information depicted herein (collectively, "Drawing"), is FUTEK's property and protected under applicable law, including copyright. FUTEK reserves all rights. The Drawing is provided solely for your information and exclusive use. **Except as expressly approved by FUTEK in writing, you may not reproduce or share this Drawing,** in whole or part, with any other firm or individual, or attempt to reverse engineer the Drawing or data contained therein. Any reproduction of this Drawing in whole or part must include this legend.

By accessing the Drawing, you agree that you have read, understand, and agree to abide by the stated Terms and Conditions of Use.

© 2023 FUTEK Advanced Sensor Technology, Inc.

FUTEK MODEL QMA150

ITEM NUMBER: QSH02151

CUSTOM TORQUE & THRUST SENSOR

INCH [mm]	R.O.= Rated Output

WIRING CODE

+ Excitation	- Excitation	+Signal (Ch 1)	-Signal (Ch 1)
RED	BLACK	GREEN	WHITE
		+Signal (Ch 2)	-Signal (Ch 2)
		ORANGE	BLUE

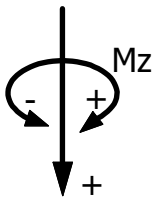

S P E C I F I C A T I O N S:

RATED OUTPUT	Fz: 1 mV/V , Mz: 1 mV/V
CAPACITY	Fz: 22.48 lbs [100 N] , Mz: 22.13 in-lbs [2.5 N-m]
SAFE OVERLOAD	150% of R.O.
ZERO BALANCE	±3% of R.O.
EXCITATION (VDC OR VAC)	10 max
BRIDGE RESISTANCE	1000 Ω nom.
NONLINEARITY	±0.5% of R.O.
HYSTERESIS	±0.5% of R.O.
NONREPEATABILITY	±0.2% of R.O.
TEMP. SHIFT ZERO	±0.01% of R.O./°F (0.018% of R.O./°C)
TEMP. SHIFT SPAN	±0.04% of Load/°F (0.072% of Load/°C)
COMPENSATED TEMP.	60 to 160°F (16 to 71°C)
OPERATING TEMP	-60 to 200°F (-51 to 93°C)
WEIGHT (approx)	0.04 lb [18.1 g]
MATERIAL	ALUMINUM 2024-T4/T351

CABLE: #29 AWG 6 Conductor Spiral Teflon Cable, 3.94 in long

RoHS EU 2015/863 Compliant

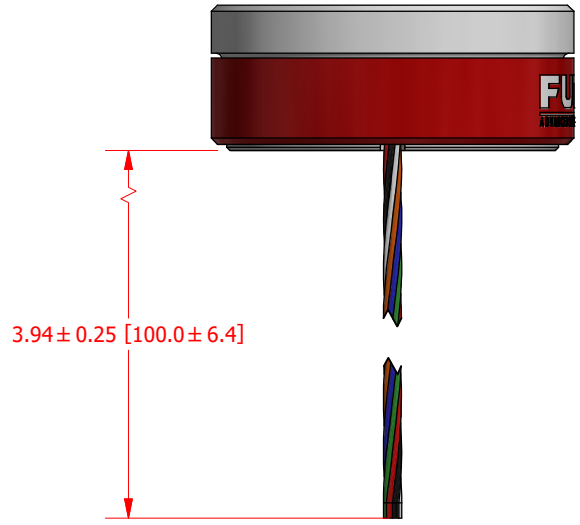

CUSTOMER APPROVAL- COMPANY:

CUSTOMER APPROVAL- NAME / DATE:

REVISIONS: (Refer to dwg # revision sheet)

OUTLINE DRAWING

STANDARD NOTES: (Unless Otherwise Specified)

ALL DIMENSIONS ARE IN INCHES

DRAWING INTERPRETATION DIMS. PER ASME-Y14.5

REMOVE BURRS AND BREAK SHARP EDGES .005 - .015

THREADS PER HANDBOOK H-28

DIMENSIONS ARE SHOWN AFTER PLATING

3rd ANGLE PROJ.

ANGLE: ± 1/2°

CHAMFER: ± 5°

TOLERANCE: .X ± 0.1" .XX ± 0.01" .XXX ± 0.005"

FUTEK

This drawing, including all information depicted herein (collectively, "Drawing"), is FUTEK's property and protected under applicable law, including copyright. FUTEK reserves all rights. The Drawing is provided solely for your information and exclusive use. **Except as expressly approved by FUTEK in writing, you may not reproduce or share this Drawing**, in whole or part, with any other firm or individual, or attempt to reverse engineer the Drawing or data contained therein. Any reproduction of this Drawing in whole or part must include this legend.

MODEL: QMA150	DWG No.: FO1539
DRAWN BY: J. RUIZ	CREATED DATE: 6/19/2020
APPROVED BY: J. PARK	APPROVED DATE: 6/30/2020
CHECKED BY:	CAGE: 1X8M6 SHEET: 1 OF 2

FUTEK MODEL QMA150

ITEM NUMBER: QSH02151

INCH [mm] | R.O.= Rated Output

CUSTOM TORQUE & THRUST SENSOR

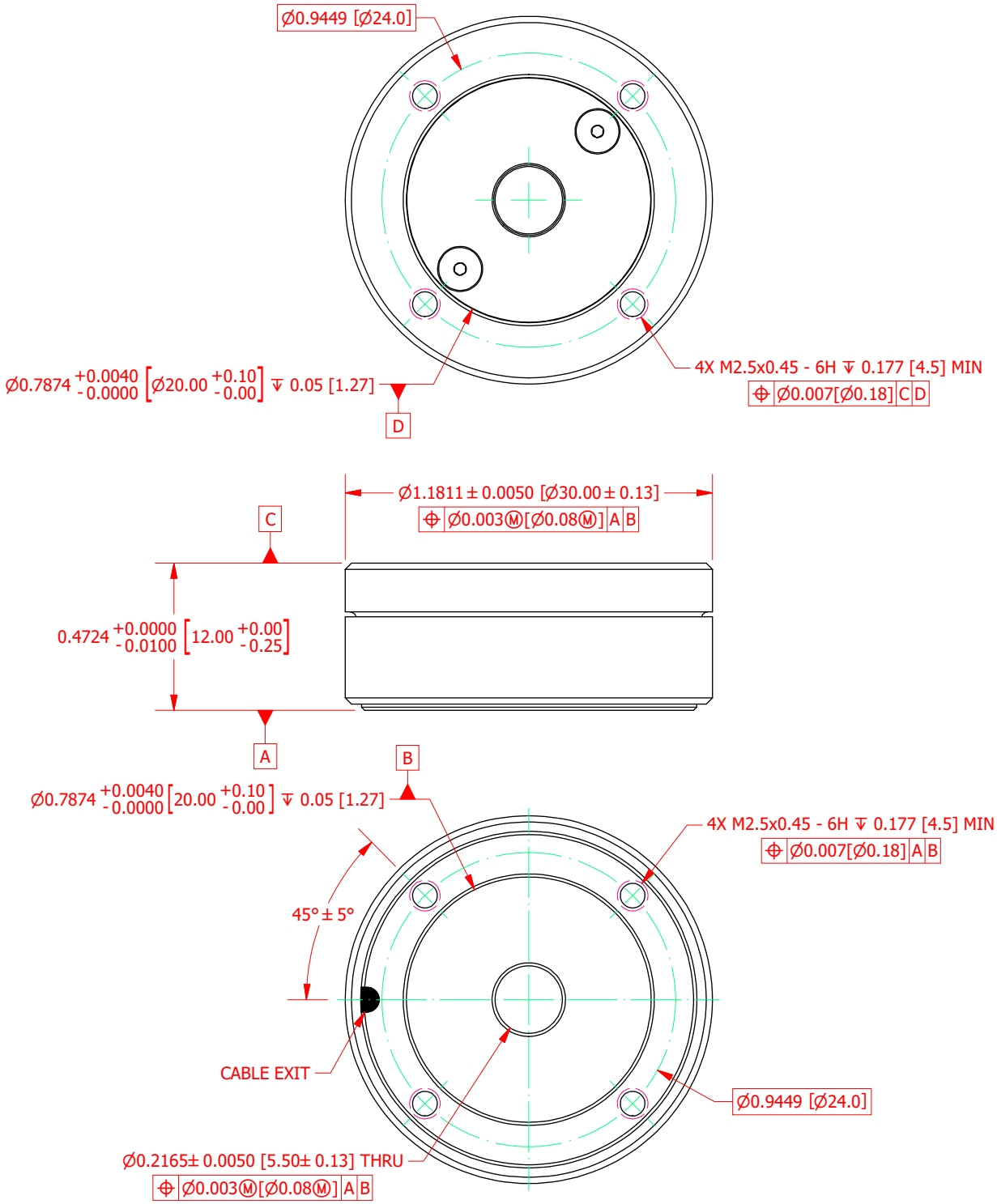

CUSTOMER APPROVAL- COMPANY:

CUSTOMER APPROVAL- NAME / DATE:

REVISIONS: (Refer to dwg # revision sheet)

OUTLINE DRAWING

STANDARD NOTES: (Unless Otherwise Specified)

ALL DIMENSIONS ARE IN INCHES

DRAWING INTERPRETATION DIMS. PER ASME-Y14.5

REMOVE BURRS AND BREAK SHARP EDGES .005 - .015

THREADS PER HANDBOOK H-28

DIMENSIONS ARE SHOWN AFTER PLATING

3rd ANGLE PROJ.

ANGLE: ± 1/2°

CHAMFER: ± 5°

TOLERANCE: .X ± 0.1" .XX ± 0.01" .XXX ± 0.005"

FUTEK

This drawing, including all information depicted herein (collectively, "Drawing"), is FUTEK's property and protected under applicable law, including copyright. FUTEK reserves all rights. The Drawing is provided solely for your information and exclusive use. **Except as expressly approved by FUTEK in writing, you may not reproduce or share this Drawing**, in whole or part, with any other firm or individual, or attempt to reverse engineer the Drawing or data contained therein. Any reproduction of this Drawing in whole or part must include this legend.

MODEL: QMA150	DWG No.: FO1539
DRAWN BY: J. RUIZ	CREATED DATE: 6/19/2020
APPROVED BY: J. PARK	APPROVED DATE: 6/30/2020
CHECKED BY:	CAGE: 1X8M6 SHEET: 2 OF 2