10 Thomas, Irvine, CA 92618 USA
Email: futek@futek.com

Terms and Conditions of Use

This drawing, including all information depicted herein (collectively, "Drawing"), is FUTEK's property and protected under applicable law, including copyright. FUTEK reserves all rights. The Drawing is provided solely for your information and exclusive use. **Except as expressly approved by FUTEK in writing, you may not reproduce or share this Drawing,** in whole or part, with any other firm or individual, or attempt to reverse engineer the Drawing or data contained therein. Any reproduction of this Drawing in whole or part must include this legend.

By accessing the Drawing, you agree that you have read, understand, and agree to abide by the stated Terms and Conditions of Use.

© 2023 FUTEK Advanced Sensor Technology, Inc.

FUTEK MODEL QMA151

CUSTOM 6 DEGREE OF FREEDOM SENSOR

ITEM NUMBER: QSH02223

INCH [mm] | R.O.= Rated Output

Specifications	ADC1	ADC2	ADC3	ADC4	ADC5	ADC6
Force/Torque	Fx	Fy	Fz	Mx	My	Mz
Full Scale Load	200 N	200 N	200 N	20 N-m	20 N-m	20 N-m
Stiffness	1.4e+7 N/m	1.3e+7 N/m	1.7e+7 N/m	8.0e+4 N-m/rad	9.0e+4 N-m/rad	2.4e+5 N-m/rad

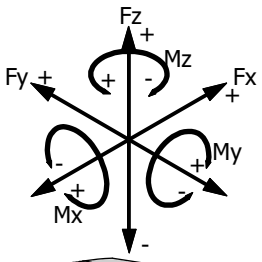

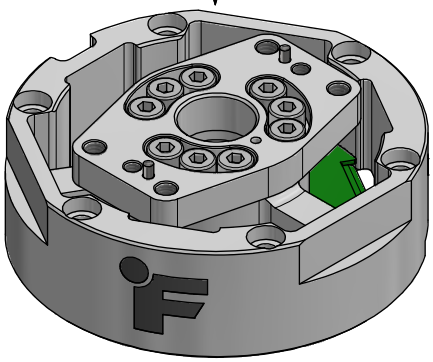

S P E C I F I C A T I O N S:

CAPACITY	SEE CHART
SAFE OVERLOAD	200% of R.O.
NONLINEARITY	±0.25% of R.O.
HYSTERESIS	±0.25% of R.O.
NONREPEATABILITY	±0.5% of R.O.
TEMP. SHIFT ZERO	±0.25% of R.O./°F (±0.45% of R.O./°C)
TEMP. SHIFT SPAN	±0.25% of R.O./°F (±0.45% of R.O./°C)
COMPENSATED TEMP.	86 to 149 °F (30 TO 65 °C)
OPERATING TEMP	32 to 149 °F (0 TO 65 °C)
WEIGHT (approx)	0.27 lb [124 g]
MATERIAL	ALUMINUM 7075-T6
CONNECTOR: MOLEX 527461571	
EXCITATION	5 VDC
Vin	5 V ±4%
POWER CONSUMPTION	1.5 W
SAMPLING	5 - 4800 SPS

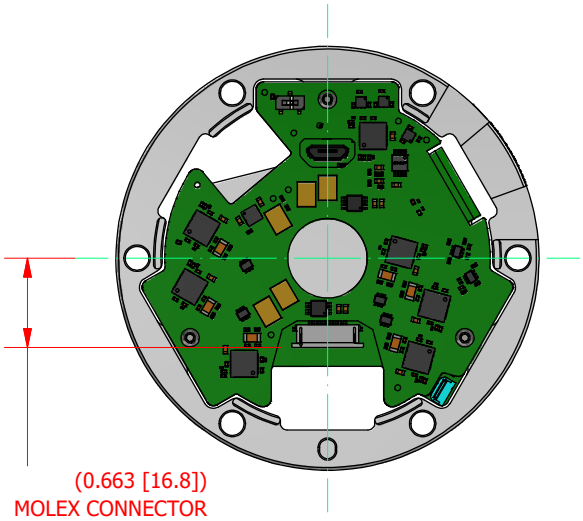

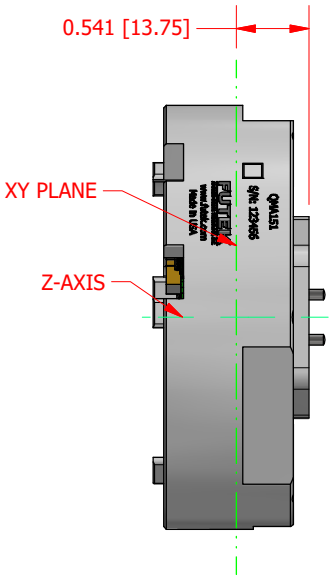

CUSTOMER APPROVAL- COMPANY:

CUSTOMER APPROVAL- NAME / DATE:

REVISIONS: (Refer to dwg # revision sheet)

OUTLINE DRAWING

STANDARD NOTES: (Unless Otherwise Specified)

ALL DIMENSIONS ARE IN INCHES

DRAWING INTERPRETATION DIMS. PER ASME-Y14.5

REMOVE BURRS AND BREAK SHARP EDGES .005 - .015

THREADS PER HANDBOOK H-28

DIMENSIONS ARE SHOWN AFTER PLATING

3rd ANGLE PROJ.

ANGLE: ± 1/2°

CHAMFER: ± 5°

TOLERANCE: .X ± 0.1" .XX ± 0.01" .XXX ± 0.005"

FUTEK

This drawing, including all information depicted herein (collectively, "Drawing"), is FUTEK's property and protected under applicable law, including copyright. FUTEK reserves all rights. The Drawing is provided solely for your information and exclusive use. **Except as expressly approved by FUTEK in writing, you may not reproduce or share this Drawing**, in whole or part, with any other firm or individual, or attempt to reverse engineer the Drawing or data contained therein. Any reproduction of this Drawing in whole or part must include this legend.

MODEL: QMA151	DWG No.: FO1561-0
DRAWN BY: J. RUIZ	CREATED DATE: 8/18/2021
APPROVED BY: J. PARK	APPROVED DATE: 2/16/2022
CHECKED BY:	CAGE: 1X8M6 SHEET: 1 OF 3

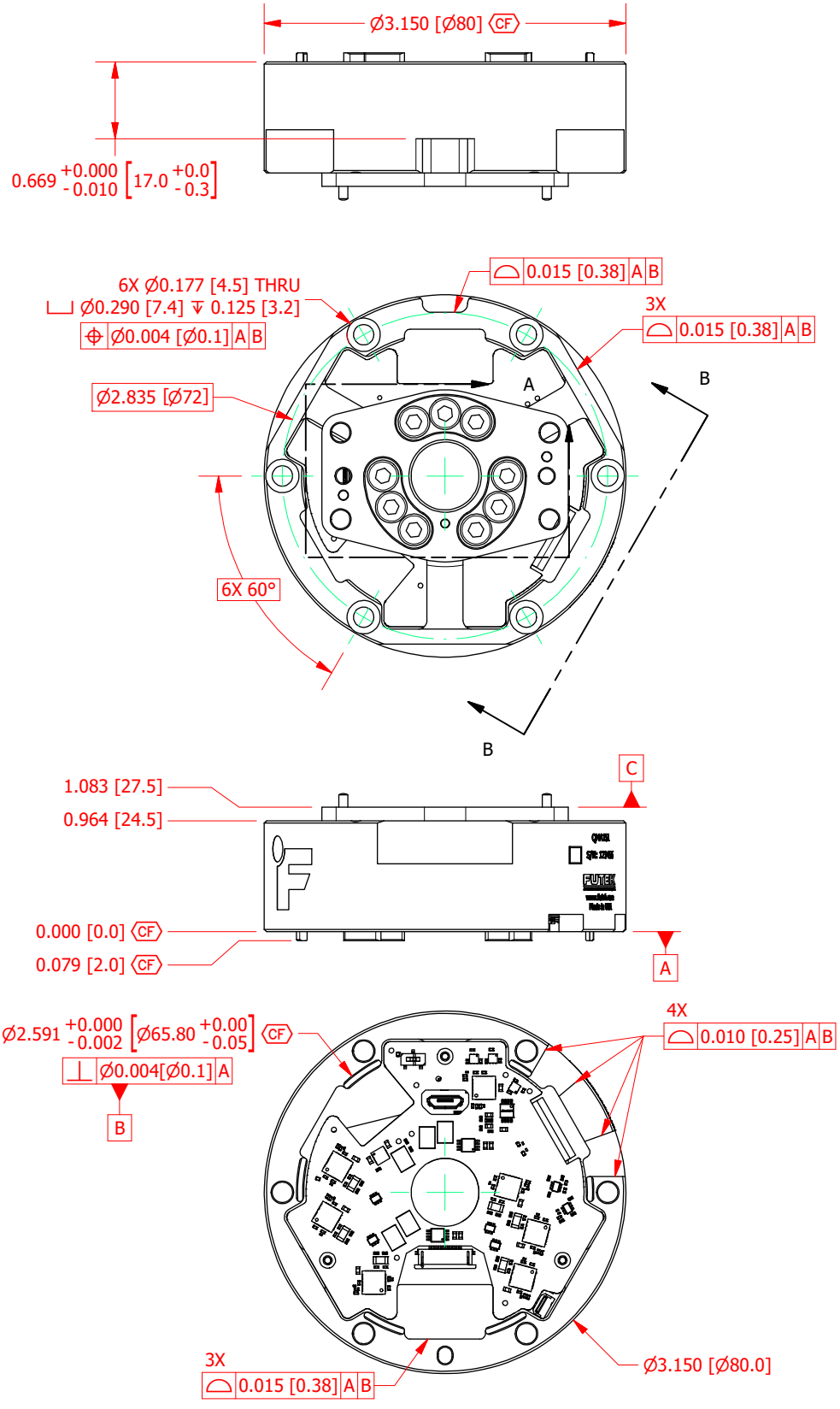

CUSTOMER APPROVAL- COMPANY:

CUSTOMER APPROVAL- NAME / DATE:

REVISIONS: (Refer to dwg # revision sheet)

OUTLINE DRAWING

STANDARD NOTES: (Unless Otherwise Specified)

ALL DIMENSIONS ARE IN INCHES

DRAWING INTERPRETATION DIMS. PER ASME-Y14.5

REMOVE BURRS AND BREAK SHARP EDGES .005 - .015

THREADS PER HANDBOOK H-28

DIMENSIONS ARE SHOWN AFTER PLATING

3rd ANGLE PROJ.

ANGLE: ± 1/2°

CHAMFER: ± 5°

TOLERANCE: .X ± 0.1" .XX ± 0.01" .XXX ± 0.005"

FUTEK

This drawing, including all information depicted herein (collectively, "Drawing"), is FUTEK's property and protected under applicable law, including copyright. FUTEK reserves all rights. The Drawing is provided solely for your information and exclusive use. **Except as expressly approved by FUTEK in writing, you may not reproduce or share this Drawing**, in whole or part, with any other firm or individual, or attempt to reverse engineer the Drawing or data contained therein. Any reproduction of this Drawing in whole or part must include this legend.

MODEL: QMA151	DWG No.: FO1561-0
DRAWN BY: J. RUIZ	CREATED DATE: 8/18/2021
APPROVED BY: J. PARK	APPROVED DATE: 2/16/2022
CHECKED BY:	CAGE: 1X8M6 SHEET: 2 OF 3

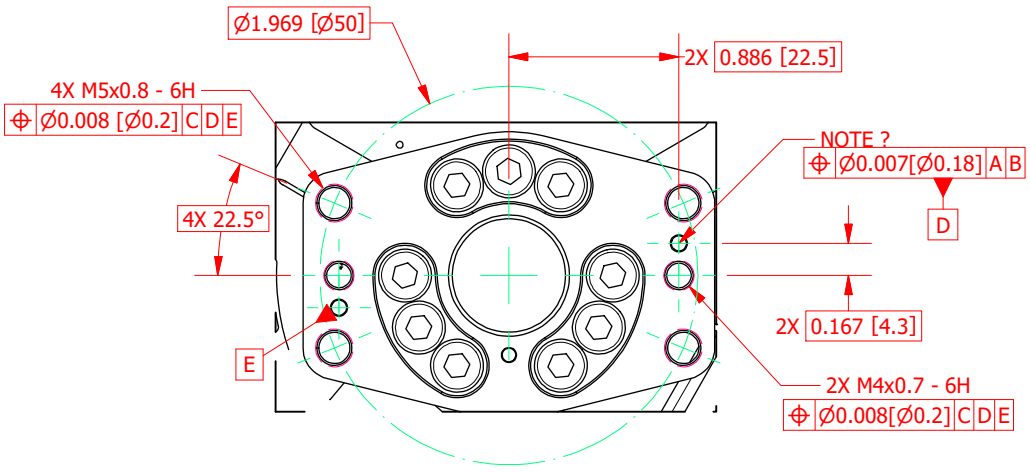

DETAIL A

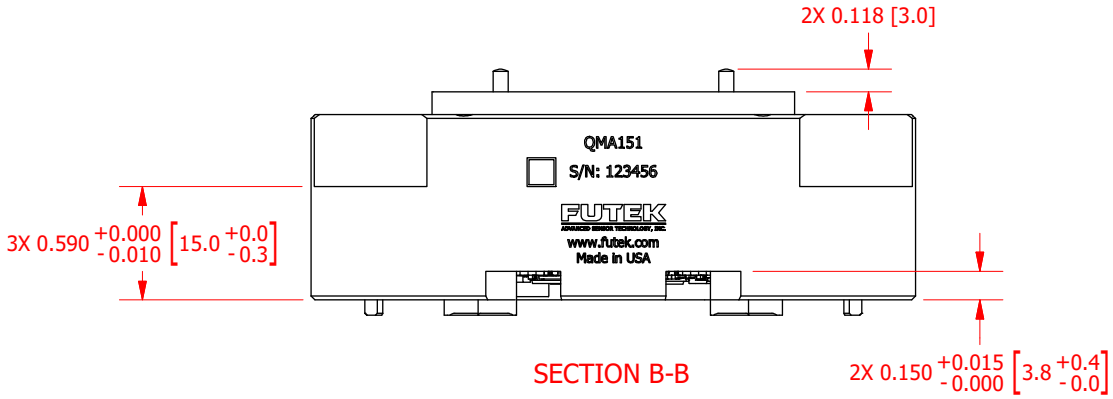

SECTION B-B

CUSTOMER APPROVAL- COMPANY:

CUSTOMER APPROVAL- NAME / DATE:

REVISIONS: (Refer to dwg # revision sheet)

OUTLINE DRAWING

STANDARD NOTES: (Unless Otherwise Specified)

ALL DIMENSIONS ARE IN INCHES

DRAWING INTERPRETATION DIMS. PER ASME-Y14.5

REMOVE BURRS AND BREAK SHARP EDGES .005 - .015

THREADS PER HANDBOOK H-28

DIMENSIONS ARE SHOWN AFTER PLATING

3rd ANGLE PROJ.

ANGLE: ± 1/2°

CHAMFER: ± 5°

TOLERANCE: .X ± 0.1" .XX ± 0.01" .XXX ± 0.005"

FUTEK

This drawing, including all information depicted herein (collectively, "Drawing"), is FUTEK's property and protected under applicable law, including copyright. FUTEK reserves all rights. The Drawing is provided solely for your information and exclusive use. **Except as expressly approved by FUTEK in writing, you may not reproduce or share this Drawing**, in whole or part, with any other firm or individual, or attempt to reverse engineer the Drawing or data contained therein. Any reproduction of this Drawing in whole or part must include this legend.

MODEL: QMA151	DWG No.: FO1561-0
DRAWN BY: J. RUIZ	CREATED DATE: 8/18/2021
APPROVED BY: J. PARK	APPROVED DATE: 2/16/2022
CHECKED BY:	CAGE: 1X8M6 SHEET: 3 OF 3