10 Thomas, Irvine, CA 92618 USA
Email: futek@futek.com

Terms and Conditions of Use

This drawing, including all information depicted herein (collectively, "Drawing"), is FUTEK's property and protected under applicable law, including copyright. FUTEK reserves all rights. The Drawing is provided solely for your information and exclusive use. **Except as expressly approved by FUTEK in writing, you may not reproduce or share this Drawing,** in whole or part, with any other firm or individual, or attempt to reverse engineer the Drawing or data contained therein. Any reproduction of this Drawing in whole or part must include this legend.

By accessing the Drawing, you agree that you have read, understand, and agree to abide by the stated Terms and Conditions of Use.

© 2023 FUTEK Advanced Sensor Technology, Inc.

FUTEK
ADVANCED SENSOR TECHNOLOGY, INC.

MODEL MTA500

Low Profile Thrust and Moment Load Cell



FEATURES

- Used for quantification of test stand misalignment
- Used for measurement of wind tunnel model aerodynamics
- Can Measure Force via Moment Arms

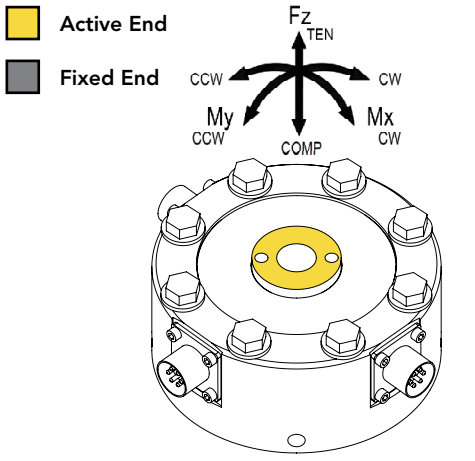

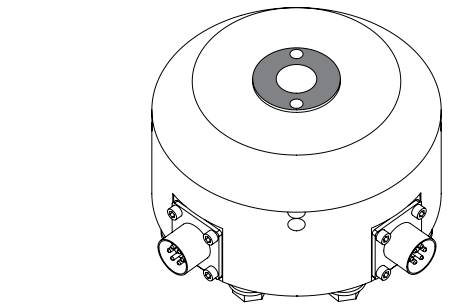

SPECIFICATIONS	
PERFORMANCE	
Nonlinearity (Mx, My)	±0.5% of RO
Nonlinearity (Fz)	±0.5% of RO
Cross Talk	±2% of RO or less
ELECTRICAL	
Rated Output (RO)	See chart on next page
Excitation (VDC or VAC)	18 max
Bridge Resistance	Mx/My: 350 Ohm nom; Fz: 700 Ohm nom
Insulation Resistance	≥500 MOhm @ 50 VDC
Connection	(3) 6 pin BENDIX receptacle (PT02E-10-6P)
Connector Code	CC1
MECHANICAL	
Safe Overload	150% of RO
Material (flexure)	Aluminum (250, 500, 1000 lb) 17-4 PH stainless-steel (5000 lb)
IP Rating	IP65
TEMPERATURE	
Operating Temperature	-60 to 200°F (-51 to 93°C)
Compensated Temperature	60 to 160°F (15 to 72°C)
Temperature Shift Zero	±0.01% of RO/°F (0.018% of RO/°C)
Temperature Shift Span	±0.01% of Load/°F (0.018% of Load/°C)
CALIBRATION	
Calibration Test Excitation	10 VDC
Calibration (standard)	5-pt Compression, CW
Calibration (available)	5-pt Tension and Compression, CW and CCW
Shunt Calibration Value	200 kOhm (250 lb, 500 lb, 1000 lb) 100 kOhm (5000 lb, 100 in-lb, 200 in-lb, 400 in-lb, 1000 in-lb)

DIMENSIONS inches [mm]

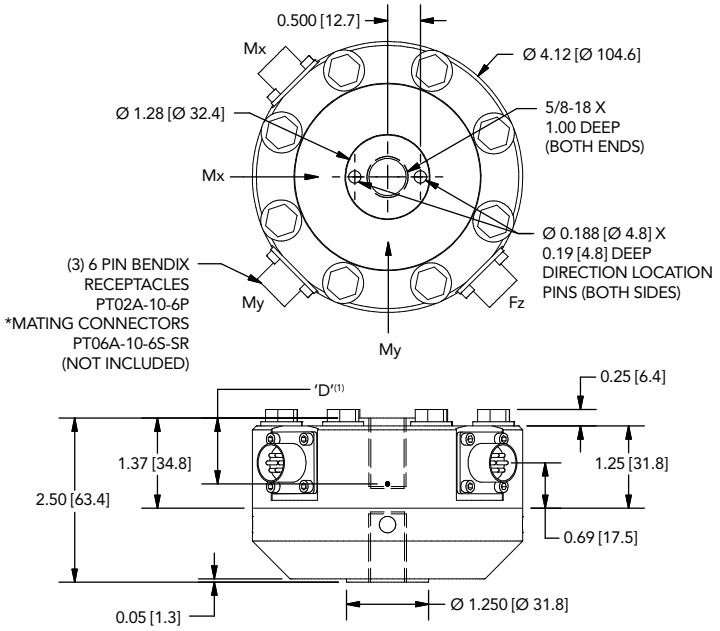

(1) Mx/My Moment Reference Point

BENDIX 6-PIN (CC1)

PIN	COLOR	DESCRIPTION
A	Red	+ Excitation
B	Black	– Excitation
C	Green	+ Signal
D	White	– Signal
E	Orange	+ Sense
F	Blue	– Sense

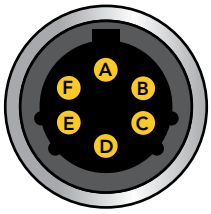

Sensor Receptacle View

CAPACITIES

ITEM #	lb (Fz)	in-lb (Mx, My)	Deflection (in) (Fz only)	Natural Frequency (Hz) (Fz only)	Rated Output (mV/V) (Fz)	Rated Output (mV/V) (Mx, My)	'D'(1)
FSH01954	250	100	0.0003	9000	1	0.75	0.745 [18.9]
FSH03191	500	200	0.001	7000			
FSH02505	1000	400	0.001	9900			
FSH02299	5000	1000	0.002	7000	2		0.809 [20.5]

Drawing Number: FI1008-H

FUTEK reserves the right to modify its design and specifications without notice.
Please visit www.futek.com/salesterms for complete terms and conditions.

10 Thomas, Irvine, CA 92618 USA
Tel: (949) 465-0900
Fax: (949) 465-0905

www.futek.com

ANSI Z540-1 ISO 17025 ISO 9001 ISO 13485 U.S. Manufacturer