10 Thomas, Irvine, CA 92618 USA
Email: futek@futek.com

Terms and Conditions of Use

This drawing, including all information depicted herein (collectively, "Drawing"), is FUTEK's property and protected under applicable law, including copyright. FUTEK reserves all rights. The Drawing is provided solely for your information and exclusive use. **Except as expressly approved by FUTEK in writing, you may not reproduce or share this Drawing,** in whole or part, with any other firm or individual, or attempt to reverse engineer the Drawing or data contained therein. Any reproduction of this Drawing in whole or part must include this legend.

By accessing the Drawing, you agree that you have read, understand, and agree to abide by the stated Terms and Conditions of Use.

© 2023 FUTEK Advanced Sensor Technology, Inc.

FUTEK MODEL PFP350

PRESSURE SENSOR WITH LEMO CONNECTOR

(Previously P4020/P4021)

Drawing Number: FI1158-B

INCH [mm] | R.O.= Rated Output

WIRING CODE (CC4)			
+Excitation	-Excitation	+Signal	-Signal
PIN 1	PIN 4	PIN 2	PIN 3

Cable Option

WIRING CODE (CC1)			
+Excitation	-Excitation	+Signal	-Signal
RED	BLACK	GREEN	WHITE
+SENSE	-SENSE	Shield	
ORANGE	BLUE	FLOATING	

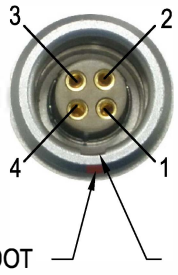



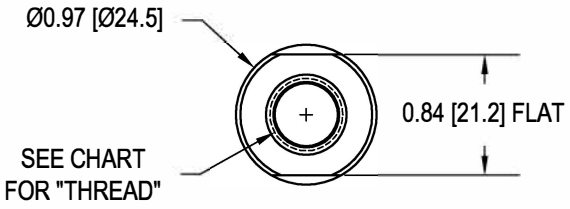

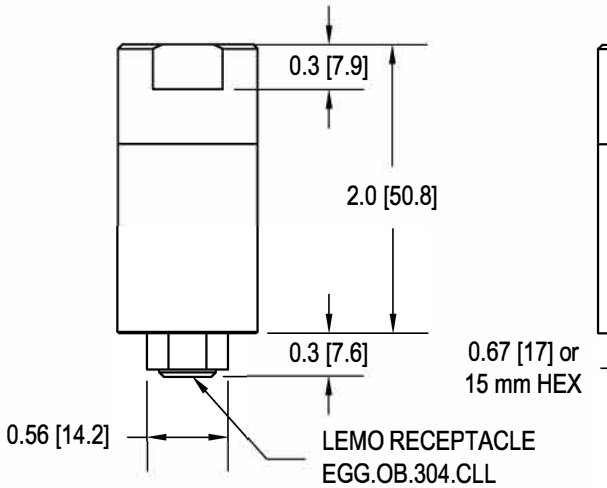

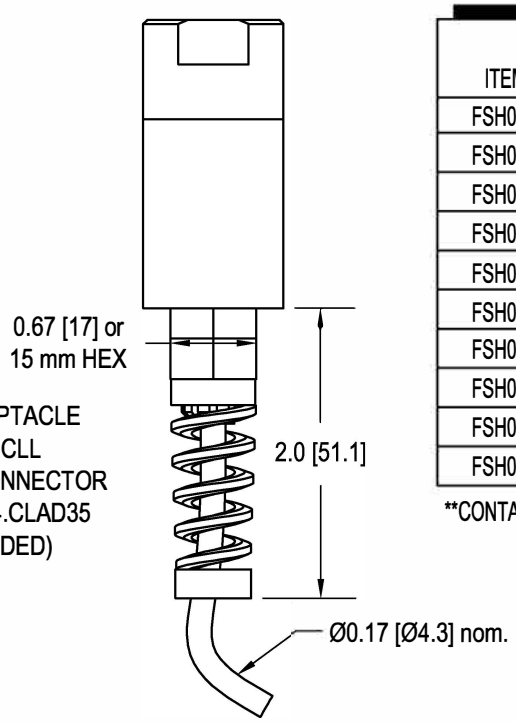

CAPACITIES			
ITEM#	PSI	BAR	THREAD
FSH00821	300	20.7	1/4-18 NPT
FSH03368			7/16-20
FSH00823	500	34.5	1/4-18 NPT
FSH03370			7/16-20
FSH00825	1000	69.0	1/4-18 NPT
FSH03372			7/16-20
FSH00827	3000	206.8	1/4-18 NPT
FSH00829	5000	344.7	
FSH00831	7500	517.1	
FSH00833	10000	689.5	

**CONTACT FACTORY FOR CABLE OPTION

SPECIFICATIONS:

RATED OUTPUT	*2 mV/V nom.*
SAFE OVERLOAD	*150% of R.O.*
ZERO BALANCE	*±1% of R.O.*
EXCITATION (VDC OR VAC)	*18 MAX*
BRIDGE RESISTANCE	*350 Ω nom.*
NONLINEARITY	*±0.5% of R.O.*
HYSTERESIS	*±0.5% of R.O.*
NONREPEATABILITY	*±0.1% of R.O.*
TEMP. SHIFT ZERO	*±0.02% of R.O./°F [0.036% of R.O./°C]*
TEMP. SHIFT SPAN	*±0.02% of LOAD/°F [0.036% of LOAD/°C]*
COMPENSATED TEMP.	*60 to 160°F [15 to 72°C]*
OPERATING TEMP.	*-60 to 250°F [-50 to 121°C]*
WEIGHT	*4.5 oz [128 g]*
MATERIAL	*17-4PH S.S.*

CONNECTOR: 4 Pin LEMO Receptacle (EGG.OB.304.CLL)

CABLE (AVAILABLE OPTION): #28 AWG, 6 Conductor, Spiral Shielded Polyurethane Cable 3 ft [1 m] Long

ACCESSORIES AND RELATED INSTRUMENTS AVAILABLE

CALIBRATION (INCLUDED)	*2pt. (5pt. AVAILABLE) 60.4KΩ SHUNT CAL. VALUE.*
CALIBRATION TEST EXCITATION	*10 VDC*

FUTEK

This drawing, including all information depicted herein (collectively, "Drawing"), is FUTEK's property and protected under applicable law, including copyright. FUTEK reserves all rights. The Drawing is provided solely for your information and exclusive use. **Except as expressly approved by FUTEK in writing, you may not reproduce or share this Drawing**, in whole or part, with any other firm or individual, or attempt to reverse engineer the Drawing or data contained therein. Any reproduction of this Drawing in whole or part must include this legend.

10 THOMAS
IRVINE, CA 92618 USA
1-800-23-FUTEK (38835)

INTERNET:
http://www.futek.com