MODEL PFT510

Miniature Pressure Sensor – Flush Mount Diaphragm



FEATURES

- Miniature sensor ideal for tight-space integration.
- Flush-mount diaphragm ensures accurate surface pressure readings.
- Fast dynamic response captures rapid pressure changes.
- mV/V output integrates easily with standard instrumentation.
- IP65-rated stainless steel housing withstands harsh environments.
- Supported by all FUTEK instruments and electronics

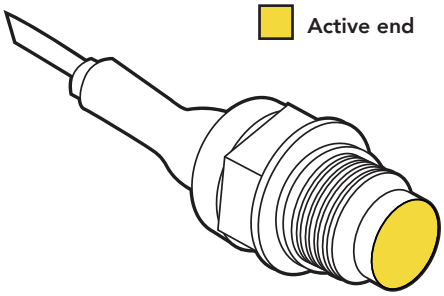

SPECIFICATIONS	
PERFORMANCE	
Nonlinearity	±0.4% of RO BFSL; ±0.8% of RO End Point
Hysteresis	±0.2% of RO BFSL; ±0.4% of RO End Point
Nonrepeatability	±0.02% of RO typ
Natural Frequency	See Capacities Chart
ELECTRICAL	
Rated Output (RO)	1-2 mV/V nom
Excitation (VDC or VAC)	7 max
Bridge Resistance	350 Ohm nom
Insulation Resistance	>1000 MOhm @50 VDC and 20°C
Connection	#29 AWG, 4 conductor, spiral shielded silicone cable, 5 ft [1.5 m] long
Wiring Code	WC1
MECHANICAL	
Weight	< 10 g without cable
Safe Overload	150% of RO
Material	17-4 PH stainless-steel (Wetted/Body)
Recommended Mounting Torque	5 Nm max
IP Rating	IP65
TEMPERATURE	
Operating Temperature	-40 to 194°F [-40 to +90°C]
Compensated Temperature	32 to 140°F [0 to 60°C]
Temperature Shift Zero	±0.02% of RO/°F [±0.036% of RO/°C]
Temperature Shift Span	±0.02% of RO/°F [±0.036% of RO/°C]
ENVIRONMENTAL	
Shock	100 G'S 1/2 SINUSOIDAL - 1 ms
Vibration	±0.02 of RO/G (20-2000 Hz, 50 G max)
EMI/RFI	EN61000
CALIBRATION	
Calibration (standard)	Certificate of Conformance
Calibration (available)	5-pt pressure
CONFORMITY	
RoHS	EU 2015/863
CE	EN55011; EN61326-1

DIMENSIONS inches [mm]

TOLERANCE:
.X ± 0.1" [2.5]
.XX ± 0.01" [0.25]
.XXX ± 0.005" [0.127]

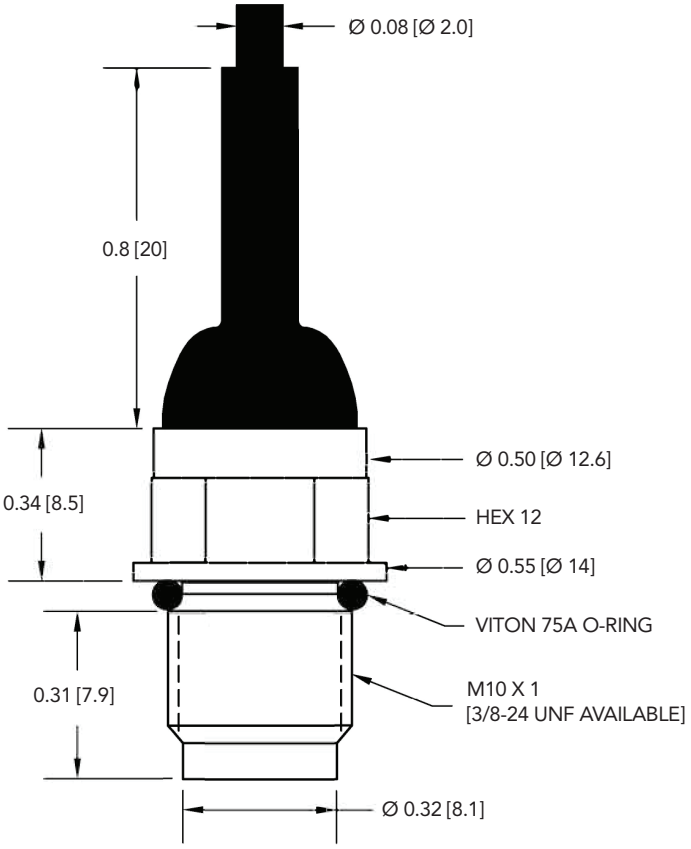

WIRING CODE (WC1 WITH SHIELD)

RED	+ EXCITATION
BLACK	– EXCITATION
GREEN	+ SIGNAL
WHITE	– SIGNAL
SHIELD	SENSOR BODY

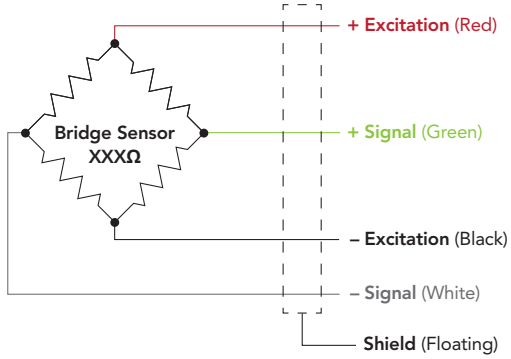

CAPACITIES

BAR*	PSI	Natural Frequency (KHz)
15	225	50
50	750	75
100	1450	90
200	3000	125
500	7500	150
700	10000	160

* Numbers in bar are not the exact conversion from PSIs

INSTALLATION INSTRUCTIONS

1. DO NOT PULL ON OR CARRY SENSOR BY CABLE.
2. BE CAREFUL NOT TO APPLY FORCE ON OR MOUNT WITH ANYTHING IN CONTACT OF THE WETTED AREA.
3. FOR INSTALLATION HAND TIGHT TORQUE AND 1/4 TURN SHOULD BE SUFFICIENT. DO NOT USE SENSOR BODY TO TORQUE, USE HEX OR FLATS.

- EXCESSIVE TORQUE MAY DAMAGE SENSOR

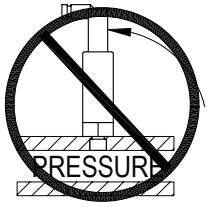

- AVOID RADIANT HEAT ON BODY OF SENSOR

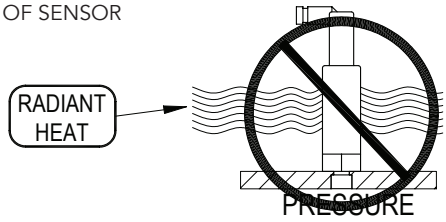

- RECOMMENDED MOUNTING PROVISION

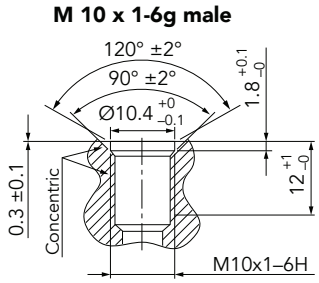

Drawing Number: FI1159-K

FUTEK reserves the right to modify its design and specifications without notice. Please visit www.futek.com/salesterms for complete terms and conditions.

This documentation was generated and completed to the best ability of FUTEK's Engineering Team using FEA Analysis, Empirical data and Multiple Testing Simulations. The information and recommendations on this document are presented in good faith and believed to be correct however, FUTEK Advanced Sensor Technology makes no representations or warranties as to the completeness or accuracy of the information.

19 Morgan, Irvine, CA 92618 USA

www.futek.com

CE RøHS ANSI Z540-1 ISO 17025 ISO 9001 ISO 13485 U.S. Manufacturer