10 Thomas, Irvine, CA 92618 USA
Email: futek@futek.com

Terms and Conditions of Use

This drawing, including all information depicted herein (collectively, "Drawing"), is FUTEK's property and protected under applicable law, including copyright. FUTEK reserves all rights. The Drawing is provided solely for your information and exclusive use. **Except as expressly approved by FUTEK in writing, you may not reproduce or share this Drawing,** in whole or part, with any other firm or individual, or attempt to reverse engineer the Drawing or data contained therein. Any reproduction of this Drawing in whole or part must include this legend.

By accessing the Drawing, you agree that you have read, understand, and agree to abide by the stated Terms and Conditions of Use.

© 2023 FUTEK Advanced Sensor Technology, Inc.

FUTEK MODEL QPA113

ITEM NUMBER: SEE CHART

CUSTOM PRESSURE SENSOR WITH SAE AS4395 MALE FITTING

INCH [mm] | R.O.= Rated Output

WIRING CODE			
Power Supply (+)	Voltage Output (+)	Ground (-)	Ground (-)
PIN A	PIN D	PIN B*	PIN C*

*INTERNALLY CONNECTED

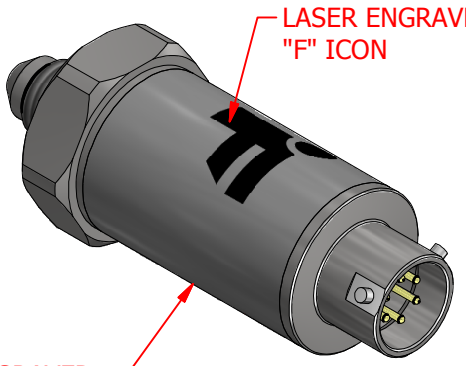

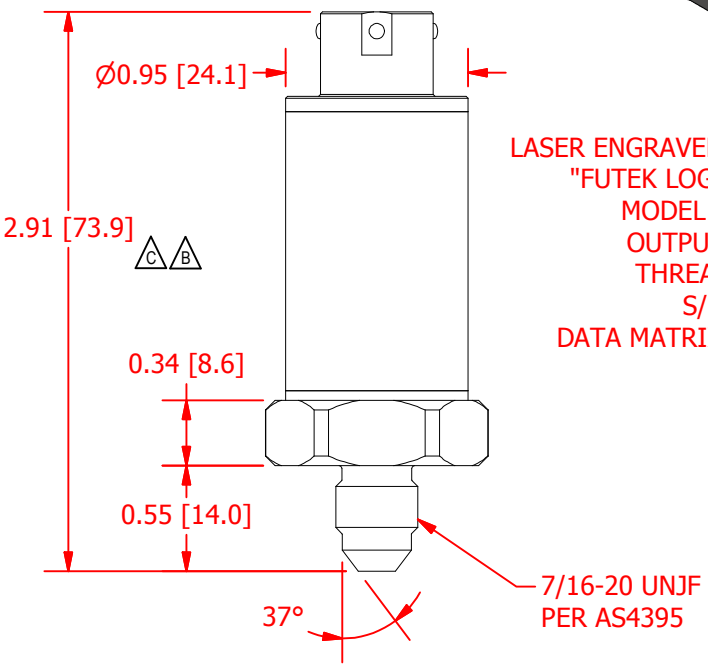

SPECIFICATIONS:

RATED OUTPUT		10 VDC nom.
CAPACITY		SEE CHART
SAFE OVERLOAD		150% of Capacity
BURST PRESSURE		300% of Capacity
ZERO BALANCE	C	0.1 to 0.25 VDC
POWER SUPPLY		13 - 28 VDC
BANDWIDTH		1000 Hz
NONLINEARITY	C	±0.25% of R.O. (End Point)
HYSTERESIS		±0.25% of R.O.
NONREPEATABILITY	B	±0.10% of R.O.
TEMP. SHIFT ZERO		±0.01% of R.O./°F (±0.018 of R.O./°C)
TEMP. SHIFT SPAN		±0.01% of LOAD/°F (±0.018 of LOAD/°C)
COMPENSATED TEMP.		60 to 160 °F (16 to 71 °C)
OPERATING TEMP		-40 to 185 °F (-40 to 85 °C)
IP RATING		IP65
MATERIAL		Stainless Steel
CONNECTOR: 6 Pin Mil Plug (PT02H-10-6P style)		

A B

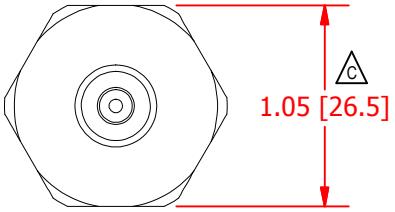

ITEM#	CAPACITY [PSI]
QSH01720	1000
QSH01721	5000

NOTES:

1) ASSEMBLY IS FULLY SEALED AND PROTECTED AGAINST SKYDROL.
2) REVERSE POLARITY, OVERVOLTAGE AND SHORT CIRCUIT PROTECTED.

CUSTOMER APPROVAL- COMPANY:

CUSTOMER APPROVAL- NAME / DATE:

REVISIONS: (Refer to dwg # revision sheet)

A	4/12/2011
B	2/26/2014
C	11/21/2017

OUTLINE DRAWING

STANDARD NOTES: (Unless Otherwise Specified)
ALL DIMENSIONS ARE IN INCHES
DRAWING INTERPRETATION DIMS. PER ASME-Y14.5M
REMOVE BURRS AND BREAK SHARP EDGES .005 - .015
THREADS PER HANDBOOK H-28
DIMENSIONS ARE SHOWN AFTER PLATING

3rd ANGLE PROJ.

ANGLE: ± 1/2°
CHAMFER: ± 5°
TOLERANCE: .X ± 0.1" .XX ± 0.01" .XXX ± 0.005"

FUTEK

This drawing, including all information depicted herein (collectively, "Drawing"), is FUTEK's property and protected under applicable law, including copyright. FUTEK reserves all rights. The Drawing is provided solely for your information and exclusive use. **Except as expressly approved by FUTEK in writing, you may not reproduce or share this Drawing**, in whole or part, with any other firm or individual, or attempt to reverse engineer the Drawing or data contained therein. Any reproduction of this Drawing in whole or part must include this legend.

MODEL: QPA113	DWG No.: FO1287-C
DRAWN BY: T. LEE	CREATED DATE: 3/14/2011
APPROVED BY: R. Walker	APPROVED DATE: 3/16/2011
CHECKED BY:	CAGE: 1X8M6 SHEET: 1 OF 1